HARPER Goossen

Straw Blower

Operator's Manual

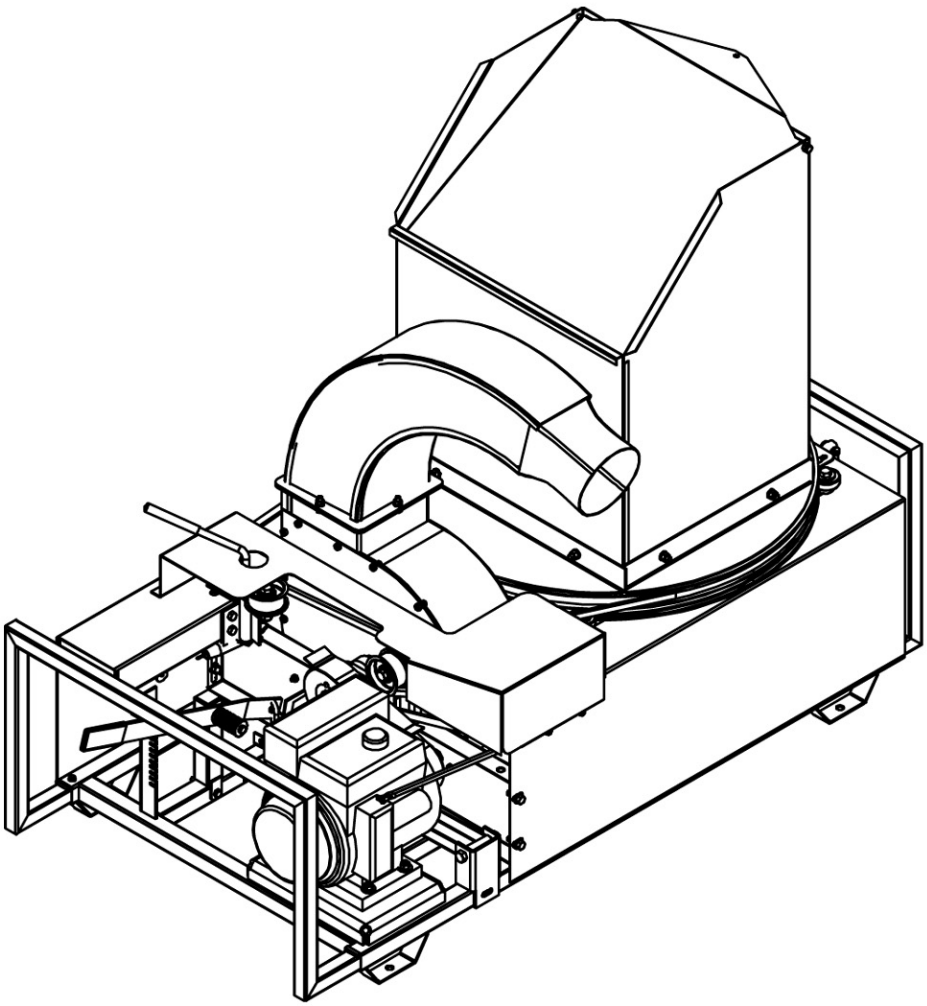

1300, 1600, 1800 & 5400 Models

© 2003 Harper Industries, Inc.

7/03 Part No. 900088

Thank you for purchasing a Harper/Goossen Straw Blower.

As with all Harper/Goossen products, the Harper/Goossen Straw Blower has been developed through tough design and testing procedures to provide a quality machine. This manual gives assembly, operating, and service information for the 1300, 1600, 1800 and 5400 Straw Blower models.

Please read and understand all instructional material included with the Straw Blower and its components before assembling and operating the equipment.

A Straw Blower can present hazards to an operator who follows unsafe procedures in either the operation or maintenance of the unit. Therefore, **SAFETY WARNINGS** are presented at certain locations in the text.

THIS SYMBOL: SAFETY WARNING!

MEANING: Failure to understand and obey this warning may result in injury to you or others.

Whenever this symbol is used, please pay very close attention to the information presented, and make sure you fully understand. If you do not, contact your Goossen dealer or Harper Industries for clarification.

SAFETY WARNING!

ALL SHIELDS AND GUARDS MUST BE IN PLACE FOR PROPER AND SAFE OPERATION OF THIS EQUIPMENT. WHERE THEY ARE SHOWN REMOVED IN THIS MANUAL, IT IS FOR PURPOSES OF ILLUSTRATION AND INSTRUCTION ONLY. DO NOT OPERATE THIS EQUIPMENT UNLESS ALL SHIELDS AND GUARDS ARE IN PLACE.

© 2003 Harper Industries, Inc.
The Goossen and Harper/Goossen names are registered trademarks of Harper Industries, Inc.
All other brand and product names are trademarks or registered trademarks of their respective companies.

LIMITED WARRANTY

The Harper/Goossen Verti-Cutter is warranted against defects in workmanship and materials for a period of TWELVE MONTHS from the date of retail purchase to the original purchaser.

Harper Industries will repair or replace, at our option, any part that our examination shows to be defective. Warranty is limited to parts, labor and ground freight delivery of replacement parts. The user will pay freight charges for parts submitted under this warranty.

No product or part may be returned for warranty consideration without prior approval from Harper Industries.

This warranty does not apply to parts subjected to misuse, abuse, alteration, improper or inadequate maintenance, or normal wear (including belts, chains and knives).

Harper Industries, its agents or representatives, make or imply no other warranties. Contact Harper Industries with any questions regarding this warranty.

FOR YOUR RECORDS

DATE OF PURCHASE _____/_____/_____

DEALER'S NAME _____

DEALER'S PHONE # _____

SERIAL # _____

Table of Contents

Specifications

Engine Powered Models: 1300, 1600, 1800

Engine	4-cycle Honda or Briggs & Stratton gasoline engine
Horsepower Rating	1300 – 13 hp 1600 – 16 hp 1800 – 18 hp
Dimensions	Width – 31” Height – 51” Length – 55”
Weight	490 lbs (shipping weight 565 lbs)
Cutting Device	4 blade impeller - 16.5” diameter
Knives	32
Discharge	6” x 30’ Super-flex hose or directional spout

PTO Powered Model: 5400

Drive	540 RPM PTO
Dimensions	Width – 31” Height – 51” Length – 60”
Weight	525 lbs (shipping weight 600 lbs)
Cutting Device	4 blade impeller - 16.5” diameter
Knives	32
Discharge	6” x 30’ Super-flex hose or directional spout

Harper Industries, Inc. is continually striving to improve the design and performance of its products. We reserve the right to make changes in specifications and design without thereby incurring any obligation relative to previously manufactured products.

The Harper/Goossen Straw Blower, in engine powered and PTO versions, chops and applies straw for erosion control, bedding and mulching. The depth of the cut is easily adjustable while in operation to handle a variety of materials* and conditions. The standard 30’ hose provides even layering and pinpoint placement. The hose is pliable down to 20° F. Temperatures below 20° may cause polyurethane to crack when stretched. A 360° directional spout is available for broadcast operations.

***NOTE:** Do not shred cardboard with a Harper/Goossen Straw Blower. The density of cardboard will cause damage to the cutting knives and the rotor.

Control Identification

Engine Powered Models

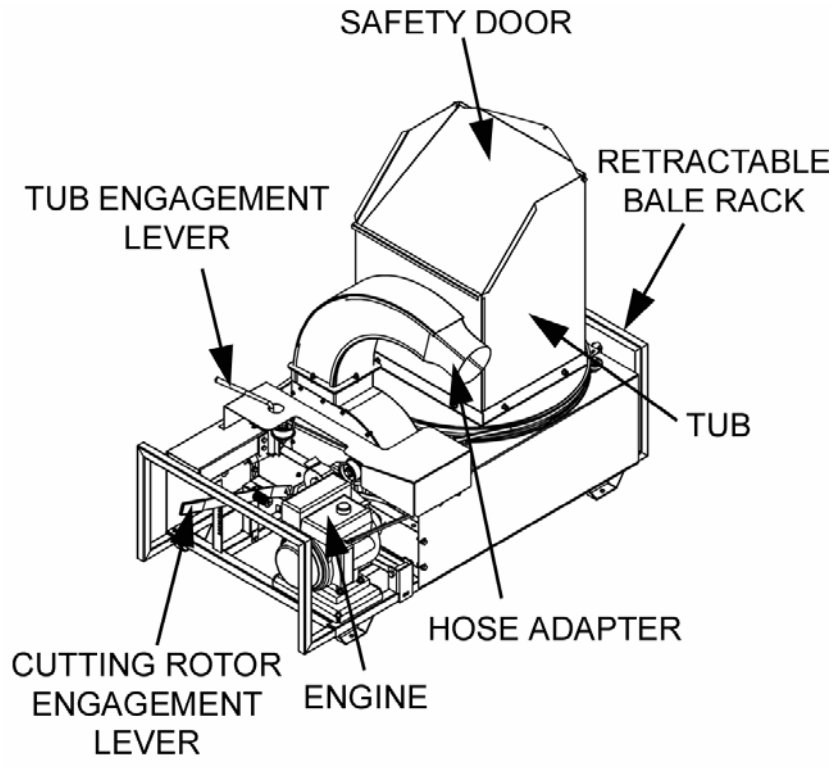

Tub – the tub secures the bale as it rotates and gravity pulls the bale down into the cutting knives.

Tub Engagement Lever – engages the rotation of the tub.

Engine – powers the Straw Blower.

Safety Door – the door on the tub is spring loaded to prevent objects from falling into the cutting knives, and debris from flying out of hopper when no bale is present.

Hose Adapter (option) – feeds the straw into the Super-flex hose. The direction spout may also be mounted in the same location.

Cutting Knife Engagement Lever – engages the cutting knives and controls belt tension.

Retractable Bale Rack – pulls out to hold an extra bale.

Engine – powers the Straw Blower.

PTO Powered Model

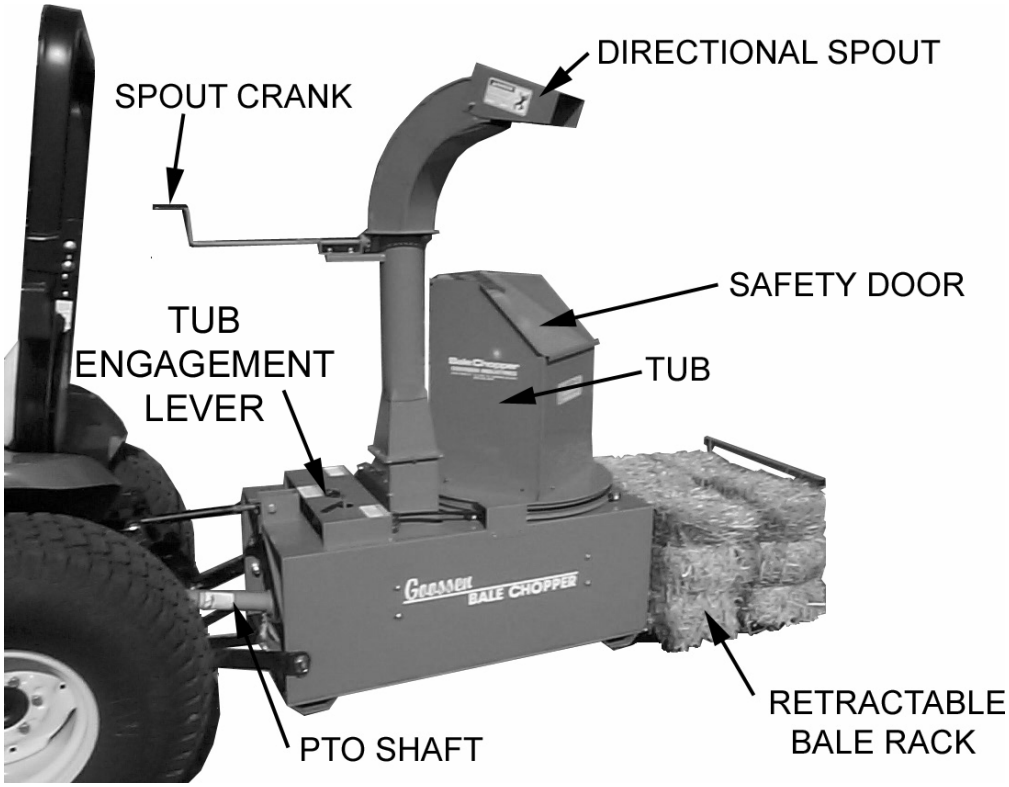

PTO Shaft – transfers power from the tractor to the Straw Blower.

Tub – the bale is placed in the tub and when engaged the tub rotates and feeds the bale down into the cutting knives.

Tub Engagement Lever – engages the rotation of the tub.

Safety Door – the door on the tub is spring loaded to prevent objects from falling into the cutting knives, and debris from flying out of hopper when no bale is present.

Retractable Bale Rack – pulls out to hold an extra bale.

Directional Spout (option) - Directs the straw to the desired area. The hose adapter may also be mounted in the same location.

Spout Crank – turns the directional spout to discharge straw to the desired area.

Safety Guidelines

- Use genuine factory parts or parts with equivalent characteristics, including type, strength and material. Failure to do so may result in product malfunction and possible injury to the operator and/or others.
- If hardware is not secure, or if some of the hardware is over-tightened, equipment failure may result, posing possible safety hazards.
- To prevent possible eye injury, always wear SAFETY GLASSES while operating equipment.
- Replace locknuts and locking screws if you can tighten them without feeling considerable resistance for several turns before they are completely tight. Replace them with factory authorized parts or their equivalent.

Gasoline

SAFETY WARNING!

Gasoline is extremely flammable and can be highly explosive.

- Always use an approved container for gasoline.
- Do not allow open flames or sparks while performing maintenance or refueling.
- Never remove the fuel tank cap or add gasoline when the engine is running or while it is hot.
- Never fill the fuel tank indoors (fumes can collect).
- Wipe up spilled gasoline immediately and completely.
- Do not store gasoline in a room with an appliance that has a pilot light to where electrical appliances or switches may cause sparks.
- Always store gasoline outside, in a safety can (a can which has a flame arrestor and pressure relief valve in pour spout).
- Gasoline fumes are heavy and will sink to the lowest point, collecting and becoming more and more hazardous. 1 part gasoline in 20 parts air will explode easily and violently.
- Never store the equipment with gasoline in the tank inside a building where fumes may reach an open flame or spark. Allow the engine to cool before storing in any enclosure.
- Be certain to provide adequate ventilation if an engine must be run indoors - exhaust fumes are dangerous.

Guards & Shields

- Keep all safety devices in place.
- Replace all worn, damaged, unusable, missing or lost safety shields and guards before operating the equipment.
- Keep the equipment in good operating condition.

Safety Decals

- If safety related or instructional decals become illegible or are removed, replace them immediately. New decals may be obtained from your local Harper/Goossen Dealer.
- If you replace parts that have such decals attached to them, make sure the decals are replaced with current versions, and are on the replacement parts before the machine is operated again.

Assembly

All Models

TUB COVER SAFETY SHIELD

Using the Hardware supplied:

1. Install the eyebolt through the top hole in the rear tub wall with a flat washer, lock washer and nut on each side of the wall.

2. Mount the tub to the tub base with the truss-head bolts, lock washers and nuts provided. Put the bolt heads inside the tub to provide a smooth inside surface.

3. Insert a 5/16” nut just past the first thread of each bolt. Put the front lip of the safety shield (lid) down *inside* the tub and screw one bolt into each coupler on the lid. Center the shield in the opening, and then lock it into position by tightening the 5/16” nuts against the edges of the shield.

4. Connect the tensioning spring from the eyebolt to the hole in the rear of the safety shield.

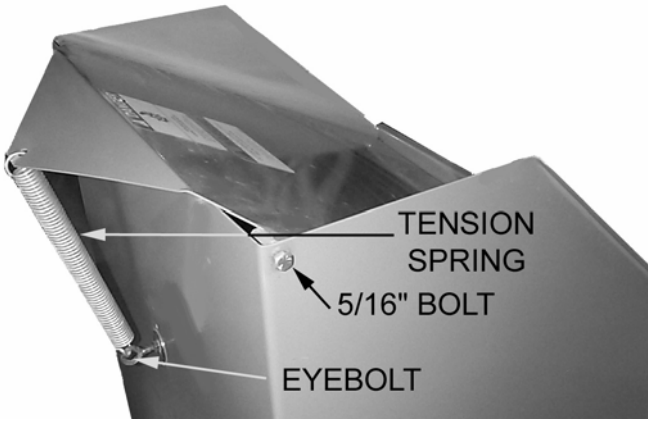

SUPER-FLEX HOSE INSTALLATION

Using the hardware supplied:

1. Mount the hose adapter to the Straw Blower.

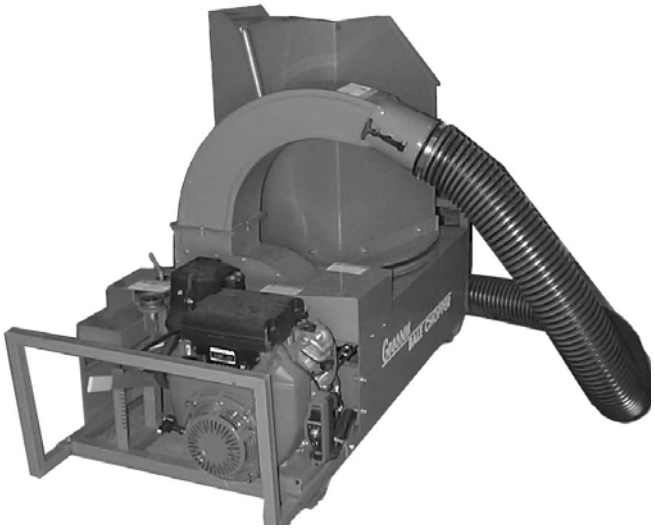

2. Attach the hose to the hose adapter with a 6” hose clamp, and secure the hose handle to the other end of the hose with two 6” hose clamps.

DIRECTIONAL SPOUT INSTALLATION

Using the hardware supplied:

1. Follow the instructions given in the Parts Section of this manual for the Directional Spout Assembly.

2. Mount the directional spout to the Straw Blower as shown in the photograph on page 6.

Engine Powered Models

BATTERY

The battery is shipped without electrolyte. Therefore, the battery must be filled with sulfuric acid electrolyte before the Straw Blower can be used.

SAFETY WARNING!

- **Battery electrolyte can cause severe burns if handled improperly.**
- **Observe all poison/ danger warnings on electrolyte cartons and on the battery.**
- **Wear splash-proof goggles and protective clothing when adding electrolyte to batteries.**
- **Avoid contact of electrolyte with the skin, eyes, or clothing.**
- **KEEP BATTERIES AND ELECTROLYTE OUT OF REACH OF CHILDREN.**
- **If electrolyte is spilled or splashed on the body, IMMEDIATELY FLUSH WITH WATER.**
- **If electrolyte comes into contact with the eyes, FLUSH WITH WATER FOR 15 MINUTES AND GET PROMPT MEDICAL ATTENTION.**
- **If electrolyte is taken internally, DRINK LARGE QUANTITIES OF WATER OR MILK, FOLLOWED WITH MILK OF MAGNESIA, BEATEN EGGS, OR VEGETABLE OIL.**

To fill the battery with electrolyte:

1. Place the battery on a level surface and remove the vent caps. If the battery has thin plastic shields in the cell openings, remove and discard them.

2. Fill the battery with battery grade sulfuric acids to just above the separators. DO NOT OVERFILL.

3. Reinstall the vent caps, and charge the battery as instructed below. AFTER charging, check the acid level, and fill to the bottom of the vent well openings. DO NOT OVERFILL.

Charging the battery:

SAFETY WARNING!

- **The battery can produce explosive gasses.**
- **Ventilate when charging or using in an en-closed space.**
- **DO NOT produce sparks from cable clamps, tools, or other sources; and**
- **DO NOT allow flames or smoking in the vicinity of the battery.**
- **Shield eyes when working near the battery.**
- **Always keep the vent caps tight and level.**

1. Make sure the vent caps included with the battery are installed.

2. Connect the battery to the charger according to the manufacturer's instructions and charge at 10 amperes for 50 minutes, or 2-9 amperes for 2 hours (depending on capabilities of charger).

Installing the battery:

1. Make sure the cable terminals and any hard hold-down wires are clean. If the battery is a replacement and the connectors and hold-down have been used before, clean them with a wire brush.

2. Place the battery in the tray, located at the right rear of the machine, and secure the battery in position with the hold-down provided.

3. Connect the cables to the proper terminals, connecting the UNGROUNDED cable first. Do not over tighten. Apply a commercial battery anti-corrosion material or petroleum jelly to the terminals, to minimize corrosion.

FUEL TANK

SAFETY WARNING!

Gasoline is extremely flammable and can be highly explosive.

- Make sure the vent valve on the gas cap is open. (If the cap is closed the engine will vapor lock and will not run.)

1600 and 1800 models only

PTO Powered Model

1. Connect the PTO shaft to the jackshaft of the Straw Blower.

2. Install the pins provided and connect your three point hitch to the Straw Blower.
   IMPORTANT: Do not connect the PTO shaft at this time.

3. Raise the Straw Blower to the height where the PTO shaft would be level if installed (shortest length).

4. Hold the PTO shaft yoke level with the 540 output shaft of the tractor.

5. Allow for ¾" clearance between the outer shield and the bell housing at the Straw Blower end of the PTO shaft.

6. If the PTO shaft is too long, separate the halves and cut the full amount of excess length from both the male and female half.

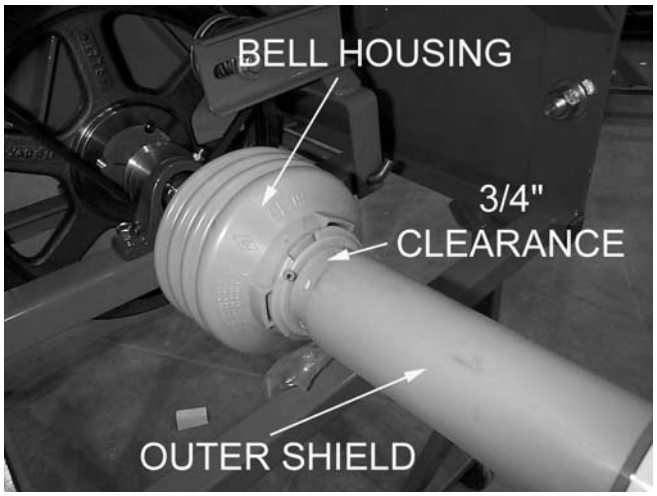

Note: If you cut only one end of the drive shaft, the other end will bottom out during operation. Cut the inner and outer shields as necessary to compensate for the length adjustment.

7. Connect the yoke of the PTO shaft to the 540 output shaft of the tractor.

Operation

SAFETY WARNING!

- **Wear approved eye and ear protection while operating the machine.**
- **Keep all guards in place during operation. Never operate machine with the tub removed.**
- **Before operating the machine, check to ensure that all the belt guides and snubbers are in place, to prevent belts from slipping off the pulleys and systems from being accidentally engaged.**
- **Check the bale tub for children, pets and foreign objects before operating.**
- **Never push material onto the cutters with your hands or feet.**
- **Periodically clean chopped material away from engines to lessen the possibility of fire.**
- **Always keep the fire extinguisher near the Straw Blower during operation.**

Engine Powered Models

To begin operation:

1. Make sure tub and cutting rotor are NOT engaged.
2. Fill fuel tank with gas.
3. Make sure the vent on the fuel tank is open at least a quarter turn. (If it is closed the engine will vapor lock and will not run). 1300 model has no manual vent.
4. Start the engine. Refer to engine manual for more information.
5. Engage the cutting rotor by pushing the rotor engagement lever down.
6. Place a bale into the tub.
7. Engage the tub rotation by moving the tub engagement lever towards the engine.
8. Add another bale when there is about 1/3 bale left in the tub.

To stop operation:

1. Stop the tub rotation.
2. Disengage the rotor mechanism.

PTO Powered Model

To begin operation:

1. Make sure the tub engagement lever is disengaged.
2. Engage the PTO, to start blade rotation.
3. Set the first bale into the tub.
4. Engage the rotor by turning the engagement lever to the front of the machine.
5. Add another bale when there is about 1/3 bale left in the tub.

To stop operation:

1. Disengage the tub.
2. Disengage the tractor PTO to stop rotor.

NOTE: The Straw Blower is gravity-fed and it is natural for the rate of chopping to slow as the bale becomes lighter and until another bale is added.

NOTE: If bales are bound by wire instead of string or plastic, remove the wire before putting the bales in the tub.

NOTE: On initial operation, the belts will become stretched and need readjustment after the first 10-15 bales. When adjusting belt tension, use a straightedge across the faces of the pulleys to make sure they are properly aligned and the belts run true.

Adjustments

BELT TENSION

NOTE: Use only industrial V-belts. Do not use automotive belts.

NOTE: Use a straightedge to check alignment across the faces of pulleys after adjusting belt tension, to ensure that the belts will run true.

IMPORTANT: Do not over tighten belts. Excessive tension can cause premature bearing, gearbox and clutch failure.

PTO Powered Model

- The blade shaft drive belt can be adjusted by means of two ½" threaded rods.
- The gear box belt can be adjusted by moving the idler pulley in the slotted hole.

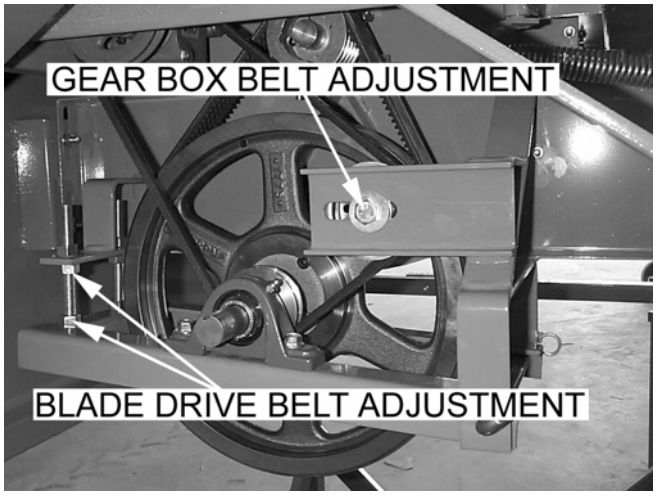

- The belt that rotates the tub can be adjusted by moving the two idler pulleys in the slotted holes.

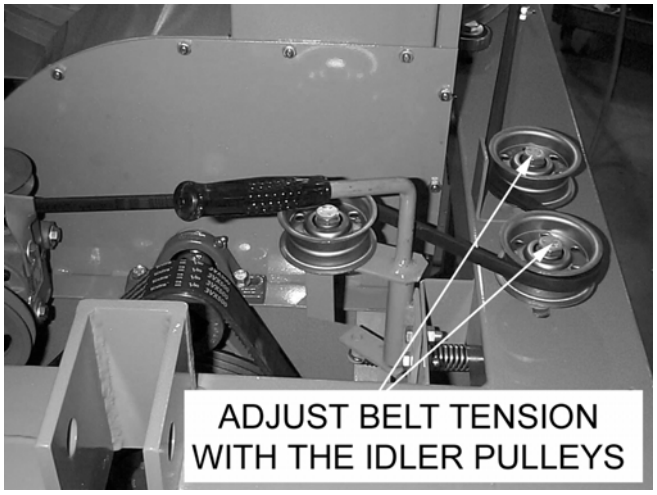

Engine Powered Models

- The tub rotation belt and the gearbox drive belt can both be adjusted by moving their respective idler pulleys in the slotted holes.

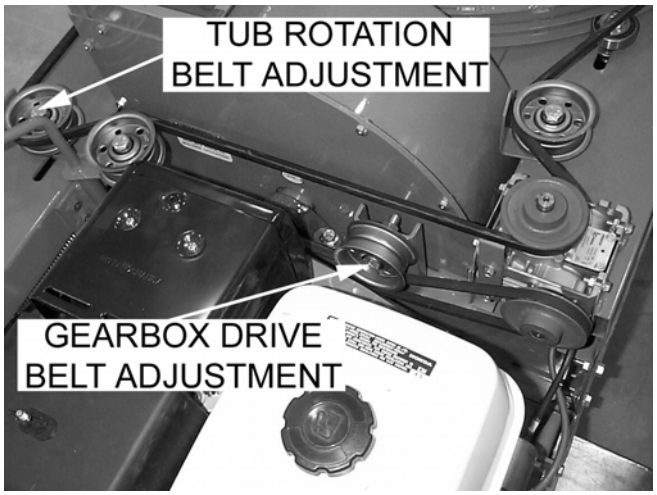

CUTTING DEPTH

All Models

- The cutting depth is adjusted by moving a lever and putting it into the slot that gives the desired cutting depth. The adjustment is located at the rear of the machine.

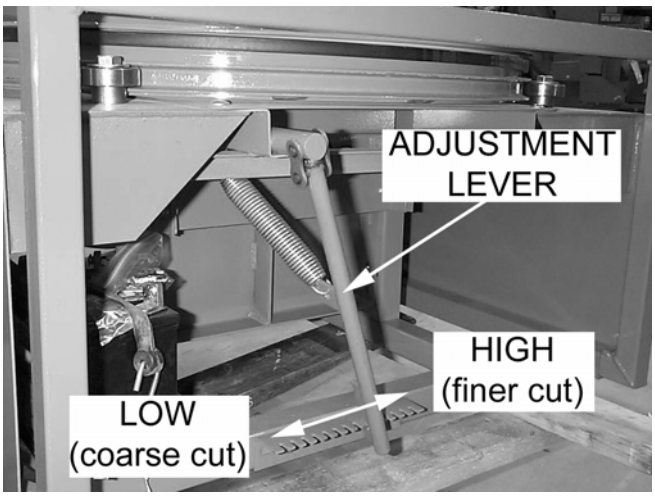

KNIFE REPLACEMENT

All Models

SAFETY WARNING!

- **Wear protective gloves whenever handling blades or working near them.**

- **Knives and their retaining hardware rotate at high speeds. It is essential that they be mounted securely to prevent accidents.**

NOTE: If the serrations are worn down but the tip of the knife is still intact, the knife may be turned around and remounted.

To maintain balance:

- Mount replacement knives only in the places from which the worn knives were removed.

- Mount additional knives only as opposing pairs on each plate, and in the patterns shown below.

- Do not remove nuts and bolts installed as weights, unless mounting knives in those holes.

NOTE: Mount the knives with bevel facing impeller and alternate between the front and back side of the plate.

To replace knives:

1. Remove the belt from around the tub.

2. Loosen the bolts mounting the rear tub carrier bearings.

3. Slide the loosened bearings toward the rear and remove the tub from the Straw Blower.

4. Unbolt and remove the grate guide.

5. With the grate adjustment lever, rotate the grate upwards and clear of the knives.

6. Remove and replace the knives as necessary, using only Grade 5, ¼”-20 x ½” bolts and lock nuts, treated with Loctite® (or equivalent). Tighten lock nuts to 18 in. lbs.

7. Return the grate to its original position.

8. Reinstall the tub.

Service

BREAK-IN SERVICE

After the first 10-15 bales:

1. Check belts, tighten if necessary.
2. Tighten setscrews on bearings.
3. Check the tub carrier bearings and make necessary adjustments.

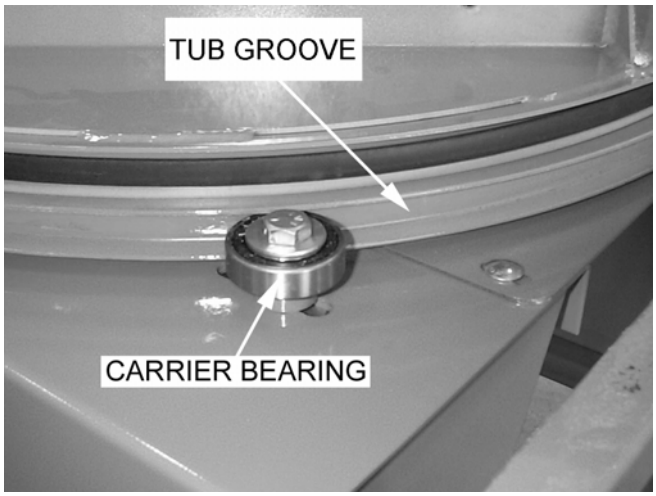

- The carrier bearing should run in the tub bearing grove. This keeps the tub spinning even.

All Models

BEARINGS

- The bearings are sealed and require no lubrication.

PTO Powered Model

GEARBOX

At 100 hours & every 6 months:

1. Drain the gearbox while warm.
2. Thoroughly flush the gearbox housing with a light, flushing oil.
3. Refill the gearbox with 6 oz of 80-90 weight gear oil.

Engine Powered Models

GEARBOX

- No maintenance is required for the gearbox on the engine powered models unless the unit leaks. Use Mobil SHC 634 worm gear lubricant or equivalent.

ENGINE

- Follow the manufacturer's maintenance recommendations located in the engine manual.
- Contact a certified Honda repair center whenever warranty repair work is needed on the Straw Blower engine.

More Information

Your Harper/Goossen dealer is the best source of up-to-date information concerning Harper/Goossen products.

Additional information is also available from the Harper Industries Service Department at 800-835-1042.

Troubleshooting

ENGINE

Problem:	What to check:
Engine shuts off during operation	• Engine may be low on fuel • Engine may be low on oil (The Honda engine is equipped with an “Oil Alert” automatic shut off) • Air breather may be clogged or closed.

BELTS

Problem:	What to check:
Belts slip	• Tension Adjustment • Load may be excessive • Knives may be too dull • Grate setting may be too low (cutting too deeply) • Foreign material may be lodged in the chopper (on knives or blower paddles) • Bearings may have seized
Belts wear rapidly, jump, catch or twist	• Pulleys may not be properly aligned. Check with a straightedge across the faces of pulleys

CUTTING AND DISCHARGE

Problem:	What to check:
Hose plugs	• Material being chopped may have too much moisture in it. • RPM may not be high enough. (540 RPM max is recommended for PTO model. Adjust throttle to increase RPM to required levels. DO NOT adjust engine governor on engine models • Foreign material may be lodged in the hose • Grate setting may be set too low
Slow cutting time	• Grate setting may be too high • Material being cut may be too wet • Knives may be too dull • RPM may be too low

GEARBOX

Problem:	What to check:
Oil leaks	• Housing bolts may be lose • Oil seals may need replaced
Gearbox overheats	• Oil level may be too low • Dirt or grease may have accumulated around the gearbox
Gear box vibrates, is very noisy	• Oil level may be too low • Components may be worn or damaged • Load may be excessive

Standard Torque Chart

SAFETY WARNING!

Refer to the Standard Torque Chart whenever bolts, nuts or screws are tightened.

Size	In-Lbs	Ft-Lbs	N-m
No. 10-24	25-35	5-7	2.8-4.0
¼ in.	60-80	18-20	7-9
5/16 in.	120-140	28-30	14-16
3/8 in.	340-360	64-74	24-27
½ in.		126-150	90-100

Note: When tightening two or more fasteners on the same part, DO NOT tighten the fasteners completely one at a time. To avoid distortion, first tighten all fasteners in sequence to one-third of torque value, then tighten to two-thirds of torque value, then tighten to full value.

HARPER Goossen

Straw Blower

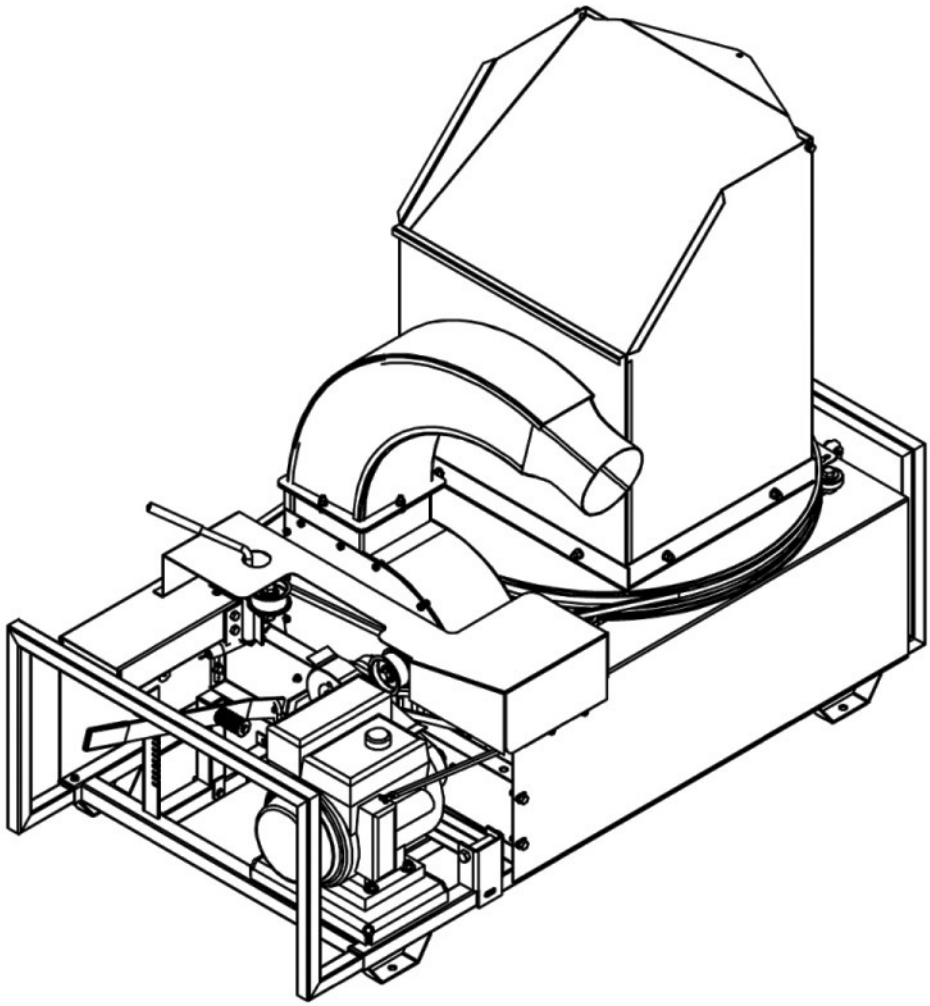

PARTS

MODEL	Assembly	Service	Fasteners
SB5400	18-19	20-21	22-23
SB1300	26-27	28-29	34-35
SB1600	26-27	30-31	36-37
SB1800	26-27	32-33	34-35
COMMON	38-42		

STRAW BLOWER 5400
ASSEMBLY COMPONENTS

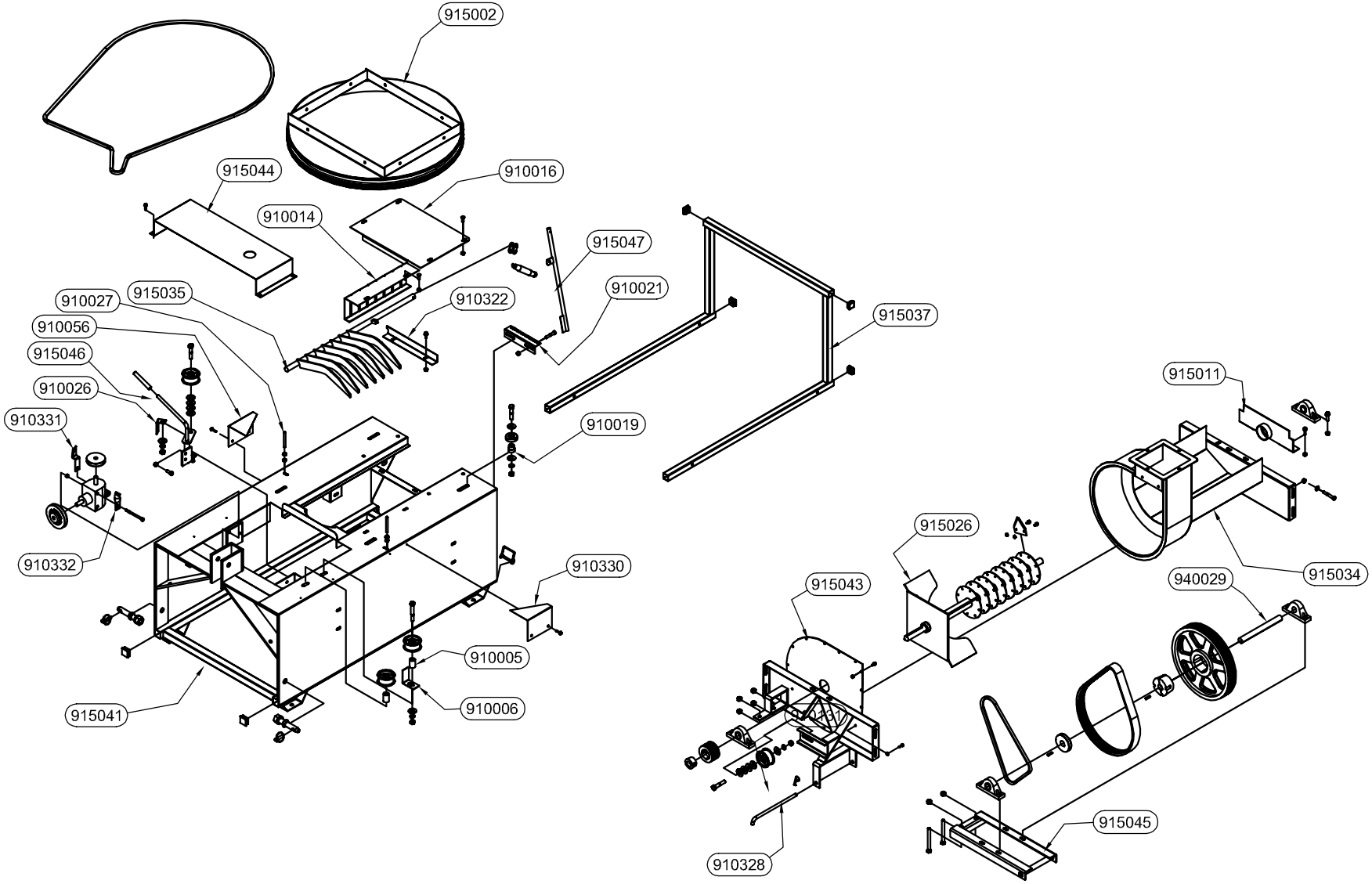

STRAW BLOWER 5400
ASSEMBLY COMPONENTS

PART #	QTY	NAME
910005	2	IDLER PULLEY SPACER
910006	1	BELT GUIDE
910014	1	GUIDE, 7 FINGER GRATE
910016	1	COVER, REAR ROTOR
910019	4	SPACER, TUB BASE BEARING
910021	1	BRACKET, GRATE ADJUSTMENT
910026	1	SHIFT ASSY STOP
910027	2	GUIDE, BELT
910131	1	HANDLE, HOSE
910322	1	GRATE ALIGNMENT BRACKET
910328	1	TIGHTENER HINGE PIN
910330	1	SHIELD, TUB BELT, PTO
910331	1	BELT GUIDE
910332	1	BELT GUIDE
915002	1	TUB BASE ASSY
915011	1	REAR BEARING GAURD
915026	1	ROTOR AND FAN ASSY
915034	1	BLOWER TROUGH ASSY, PTO
915035	1	ADJUSTABLE GRATE, PTO
915037	1	BALE CARRIER
915041	1	MAIN FRAME ASSY, PTO
915043	1	BLOWER COVER WELDMENT
915044	1	FRONT BELT SHIELD
915045	1	TIGHTENER FRAME WELDMENT
915046	1	TUB SHIFT ASSY, PTO
915047	1	GRATE LEVER ASSY, PTO
940029	1	DRIVE SHAFT
910056	1	SHIELD, TUB BELT

STRAW BLOWER 5400

SERVICE PARTS

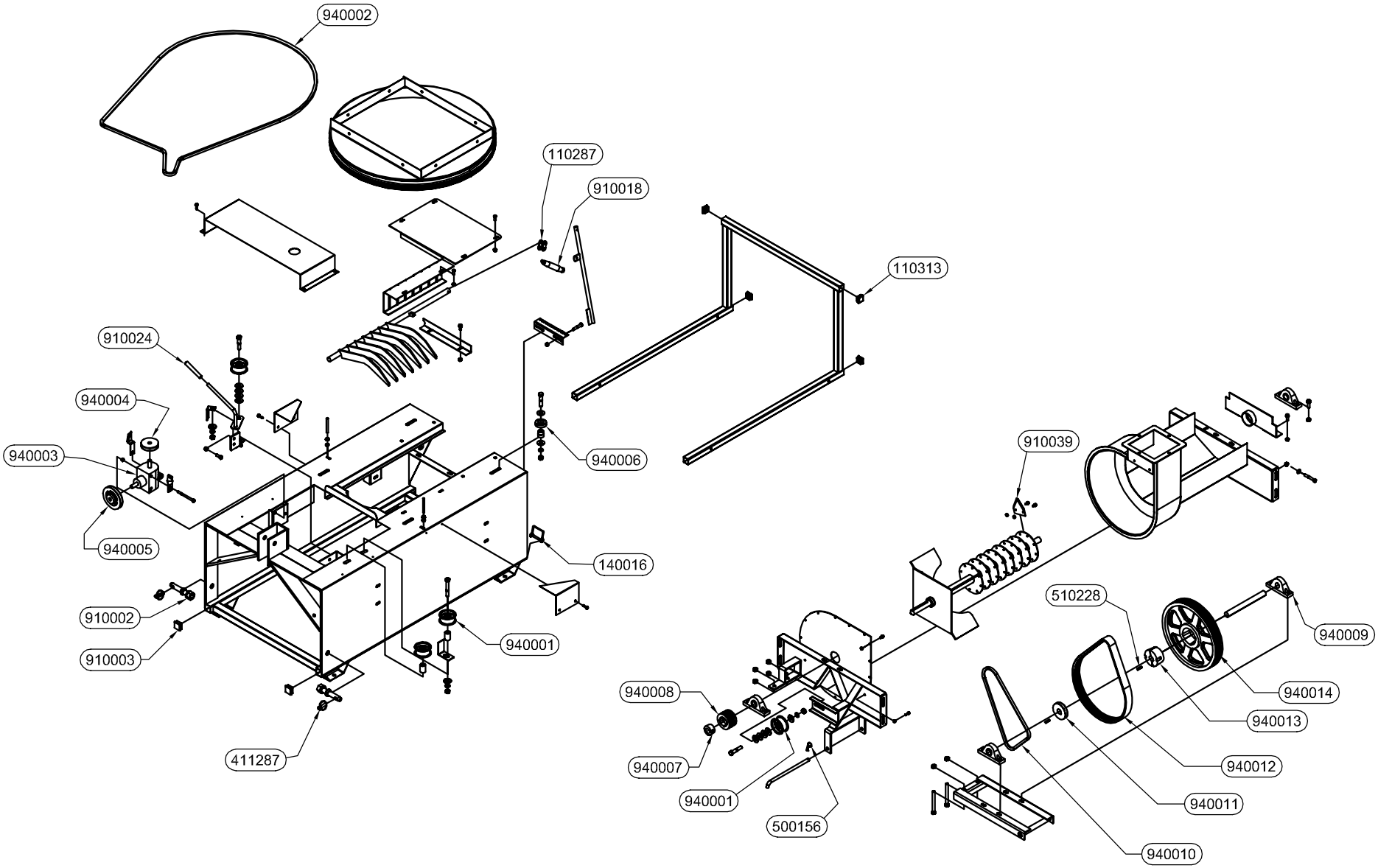

1-07-03

STRAW BLOWER 5400
SERVICE PARTS

PART #	QTY	NAME
110287	1	CONNECTING LINK, #80
110313	4	PLUG, 1-1/4 SQ TUBE
140016	1	LOCK PIN, WIRE 1/4 X 2-1/4
411287	2	PIN, LYNCH 7/16-14QP
500156	1	PIN, HAIRPIN COTTER
510228	2	KEY, .25 X .25 X 1.0
910002	2	3-POINT PIN W/ HARDWARE
910003	2	CAP PLUG
910018	1	SPRING
910024	1	SHIFT ROD COVER
910039	32	CUTTING KNIFE
940001	4	NARROW IDLER PULLEY
940002	1	TUB DRIVE BELT
940003	1	GEAR BOX
940004	1	GEAR BOX TOP SHEAVE
940005	1	GEAR BOX SIDE SHEAVE, PTO
940006	4	TUB BASE BEARING
940007	1	TAPER LOCK BUSHING
940008	1	ROTOR SHEAVE
940009	4	PILLOW BLOCK BEARING
940010	1	GEAR BOX DRIVE BELT
940011	1	SHEAVE 3.0 X 1
940012	1	BANDED DRIVE BELT
940013	1	TAPER LOCK BUSHING
940014	1	DRIVE SHEAVE

STRAW BLOWER 5400
BOLTS, NUTS & WASHERS

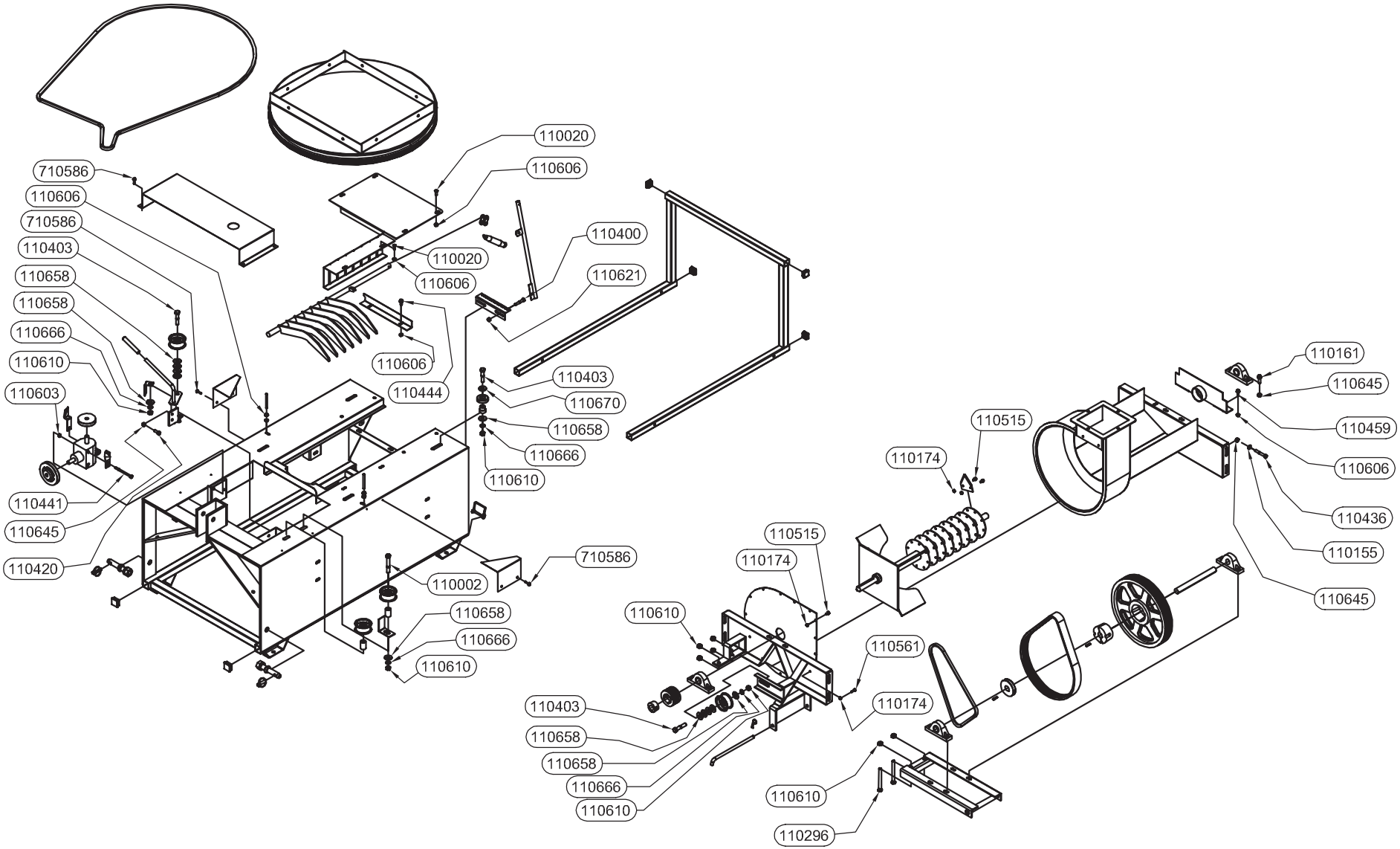

1-07-03

PART #	QTY	NAME
110002	2	BOLT, 1/2-13 X 3.5
110020	6	BOLT, 5/16-18 X .75 CARRIAGE
110155	8	WASHER, 3/8 FLAT, "SAE"
110161	8	BOLT, 3/8-16 X 1.25 WIZ FLANGE
110174	78	NUT, 1/4-20, LOCK (2-WAY)
110296	2	BOLT, 1/2-13 X 5, FULL THREAD
110658	20	WASHER, 1/2 FLAT
110400	2	BOLT, 3/8-16 X 2
110403	6	BOLT, 1/2-13 X 2.5
110603	3	NUT, 5/16-18 LOCK (NYLON)
110420	2	BOLT, 3/8-16 X 1
110606	14	NUT, 5/16-18 WIZ FLANGE
110666	8	WASHER, 1/2 LOCK
110610	14	NUT, 1/2-13
110436	8	BOLT, 3/8-16 X 2.5
110441	3	BOLT, 5/16-18 X 4
110444	2	BOLT, 5/16-18 X .75 WIZ FLANGE
110621	2	NUT, 3/8-16 LOCK
110459	2	BOLT, 5/16-18 X 1 WIZ FLANGE
110515	74	BOLT, 1/4-20 X .5
710586	8	SCREW, 1/4 X 1 TEK SELF TAP
110561	4	BOLT, 1/4-20 X .75
110645	18	NUT, 3/8-16 WIZ FLANGE
110670	4	WASHER, 7/16 FLAT STANDARD

STRAW BLOWER 1300, 1600, 1800
ASSEMBLY COMPONENTS

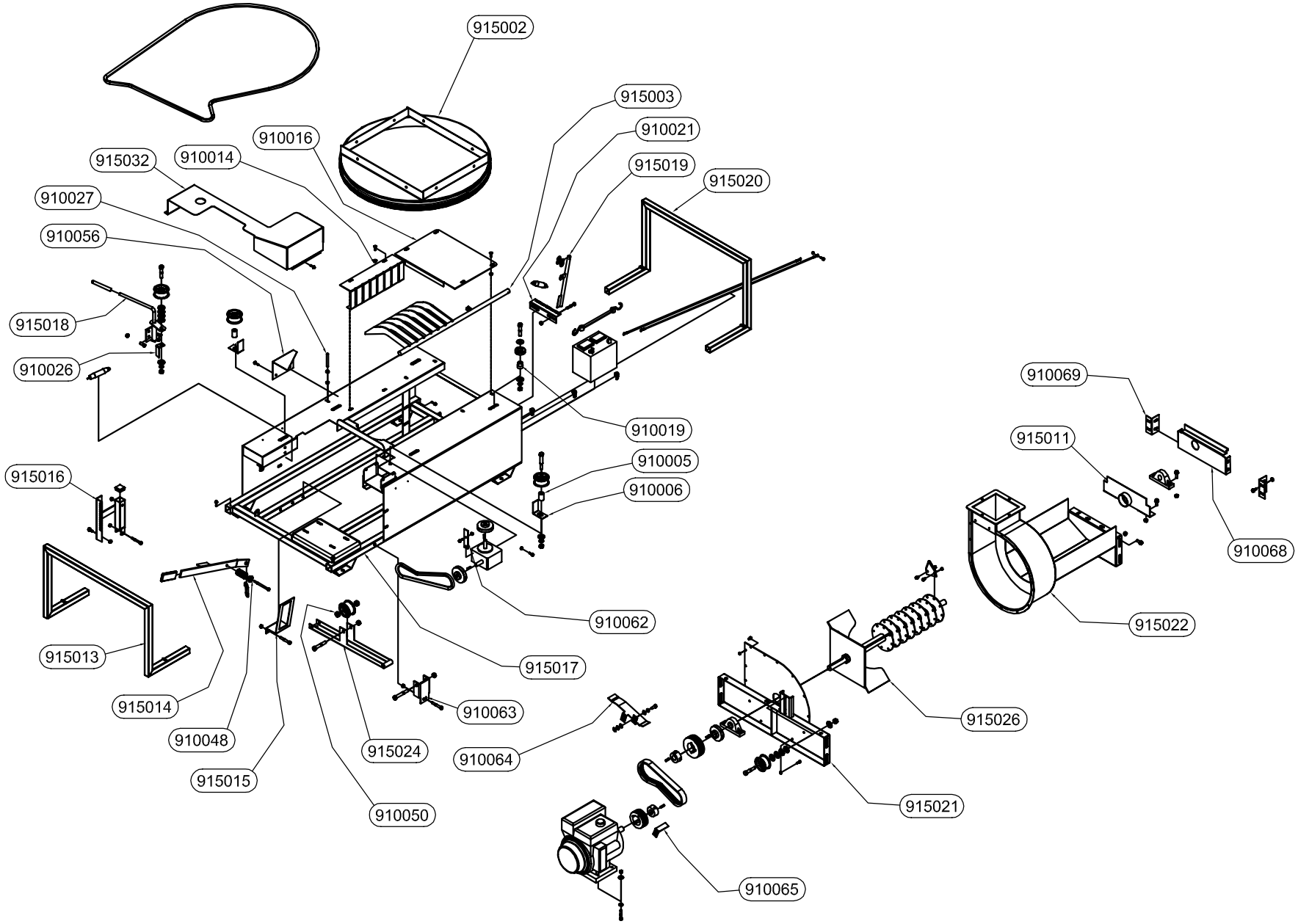

1-06-03

STRAW BLOWER 1300, 1600, 1800
ASSEMBLY COMPONENTS

PART #	QTY	NAME
910005	2	IDLER PULLEY SPACER
910006	2	BELT GUIDE
910014	1	GUIDE, 7 FINGER GRATE
910016	1	COVER, REAR ROTOR
910019	4	SPACER, TUB BASE BEARING
910021	1	BRACKET, GRATE ADJUSTMENT
910026	1	SHIFT ASSY STOP
910027	1	GUIDE, BELT
910048	1	SPRING BUSHING
910050	2	ENGAGING CHANNEL SPACER
910056	1	SHIELD, TUB BELT
910062	1	GUIDE, BELT
910063	1	ENGAGING CHANNEL SWIVEL
910064	1	GUIDE, UPPER DRIVE BELT
910065	1	GUIDE, LOWER DRIVE BELT
910068	1	PLATE, REAR FRAME
910069	2	BRACKET, REAR FRAME PLATE
915002	1	TUB BASE ASSY
915003	1	ADJUSTABLE GRATE
915011	1	REAR BEARING GAURD
915013	1	FRONT LIFT HANDLE
915014	1	ENGAGING HANDLE ASSY
915015	1	ENGAGING CHANNEL GUIDE
915016	1	ENGAGING HANDLE STOP ASSY
915017	1	MAIN FRAME ASSY
915018	1	SHIFT ASSY TUB
915019	1	GRATE LEVER
915020	1	REAR LIFT HANDLE
915021	1	BLOWER TROUGH FRONT
915022	1	BLOWER TROUGH ASSY
915024	1	WELDMENT ENGAGING CHANNEL
915026	1	ROTOR AND FAN ASSY
915032	1	SHIELD ASSY FRONT BELT

STRAW BLOWER 1300

SERVICE PARTS

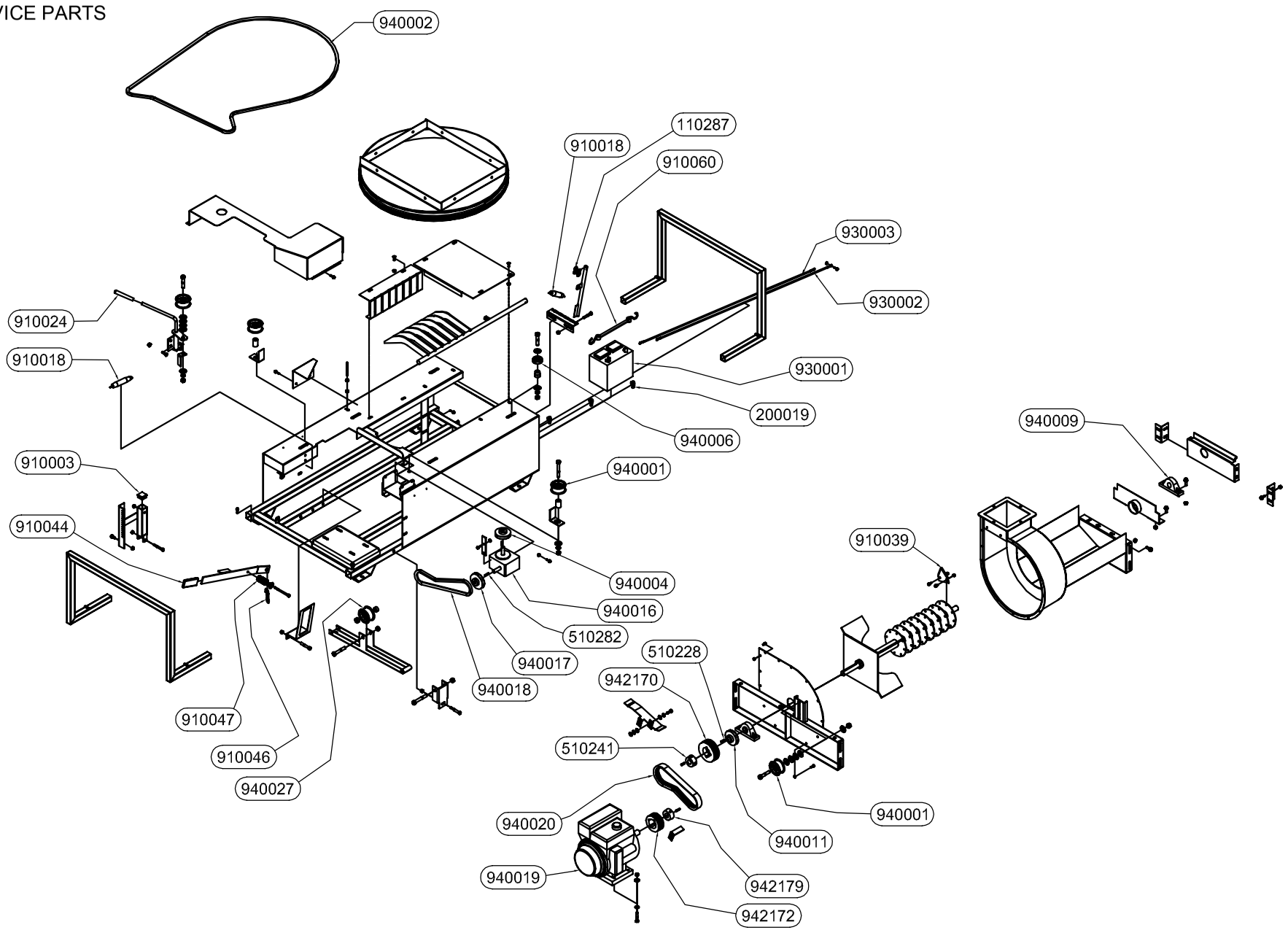

1-02-04

STRAW BLOWER 1300
SERVICE PARTS

PART #	QTY	NAME
110287	1	CONNECTING LINK, #80
200019	3	CLAMP, ADEL 5/8 ID
510228	3	KEY, .25 X .25 X 1.0
510241	1	BUSHING, QD 1" SDS
510282	2	3/16 X 1 KEY
910003	1	CAP PLUG
910018	2	SPRING
910024	1	SHIFT ROD COVER
910039	32	CUTTING KNIFE
910044	1	COVER, ENGAGING HANDLE
910046	1	ENGAGING CHANNEL CLIP
910047	1	SPRING
910060	1	HOLD DOWN STRAP
930001	1	BATTERY, STRAWBLOWER GAS
930002	1	BATTERY CABLE, POSITIVE
930003	1	BATTERY CABLE, NEGATIVE
940001	4	NARROW IDLER PULLEY
940002	1	TUB DRIVE BELT
940004	1	GEAR BOX TOP SHEAVE
940006	4	TUB BASE BEARING
940009	2	PILLOW BLOCK BEARING
940011	1	SHEAVE 3.0 X 1
940016	1	GEAR BOX
940017	1	GEAR BOX SIDE SHEAVE
940018	1	GEAR BOX BELT
940019	1	ELECTRIC START ENGINE, 13 HP
940020	1	BANDED DRIVE BELT
940027	1	WIDE IDLER PULLEY
942170	1	SHEAVE, 3/3V4.50 SDS-QD
942172	1	SHEAVE, 3/3V6.65 SH-QD
942179	1	BUSHING, QD 1" SH

STRAW BLOWER 1600
SERVICE PARTS

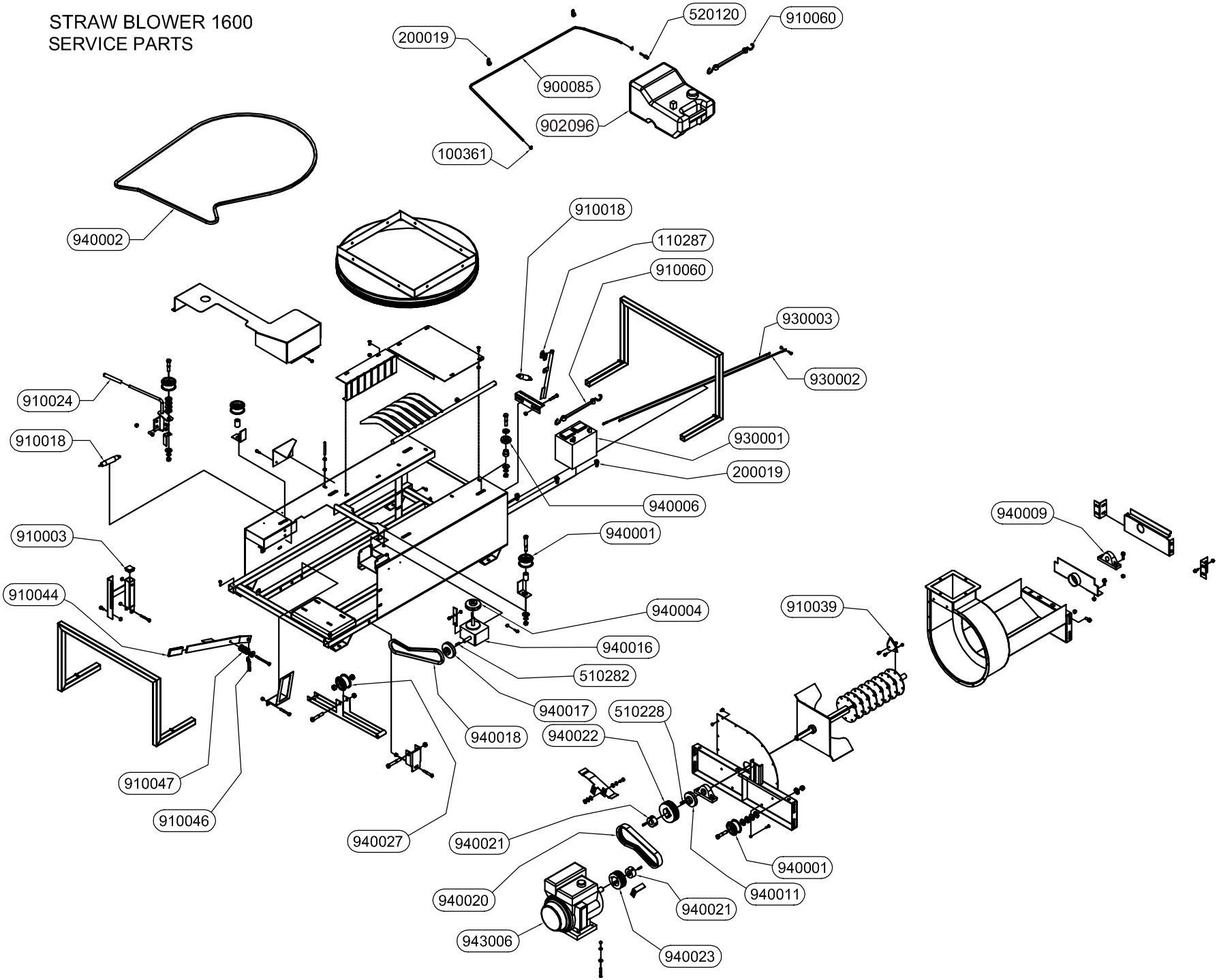

1-06-03

STRAW BLOWER 1600
SERVICE PARTS

PART #	QTY	NAME
100361	2	CLAMP, HOSE 1/4"
110287	1	CONNECTING LINK, #80
200019	5	CLAMP, ADEL 5/8 ID
510228	3	KEY, .25 X .25 X 1.0
510282	2	3/16 X 1 KEY
520120	1	ADAPTER, 4BI-4MP
902026	1	FUEL TANK
910003	1	CAP PLUG
910018	2	SPRING
910024	1	SHIFT ROD COVER
910039	32	CUTTING KNIFE
910044	1	COVER, ENGAGING HANDLE
910046	1	ENGAGING CHANNEL CLIP
910047	1	SPRING
910060	2	HOLD DOWN STRAP
930001	1	BATTERY, STRAWBLOWER GAS
930002	1	BATTERY CABLE, POSITIVE
930003	1	BATTERY CABLE, NEGATIVE
940001	4	NARROW IDLER PULLEY
940002	1	TUB DRIVE BELT
940004	1	GEAR BOX TOP SHEAVE
940006	4	TUB BASE BEARING
940009	2	PILLOW BLOCK BEARING
940011	1	SHEAVE 3.0 X 1
940016	1	GEAR BOX
940017	1	GEAR BOX SIDE SHEAVE
940018	1	GEAR BOX BELT
940020	1	BANDED DRIVE BELT
940021	2	TAPER LOCK BUSHING
940022	1	DRIVE SHEAVE
940023	1	DRIVE SHEAVE
940027	1	WIDE IDLER PULLEY
943006	1	ELECTRIC START ENGINE, 16 HP
900085	1	HOSE, FUEL LINE, SB1600

STRAW BLOWER 1800
SERVICE PARTS

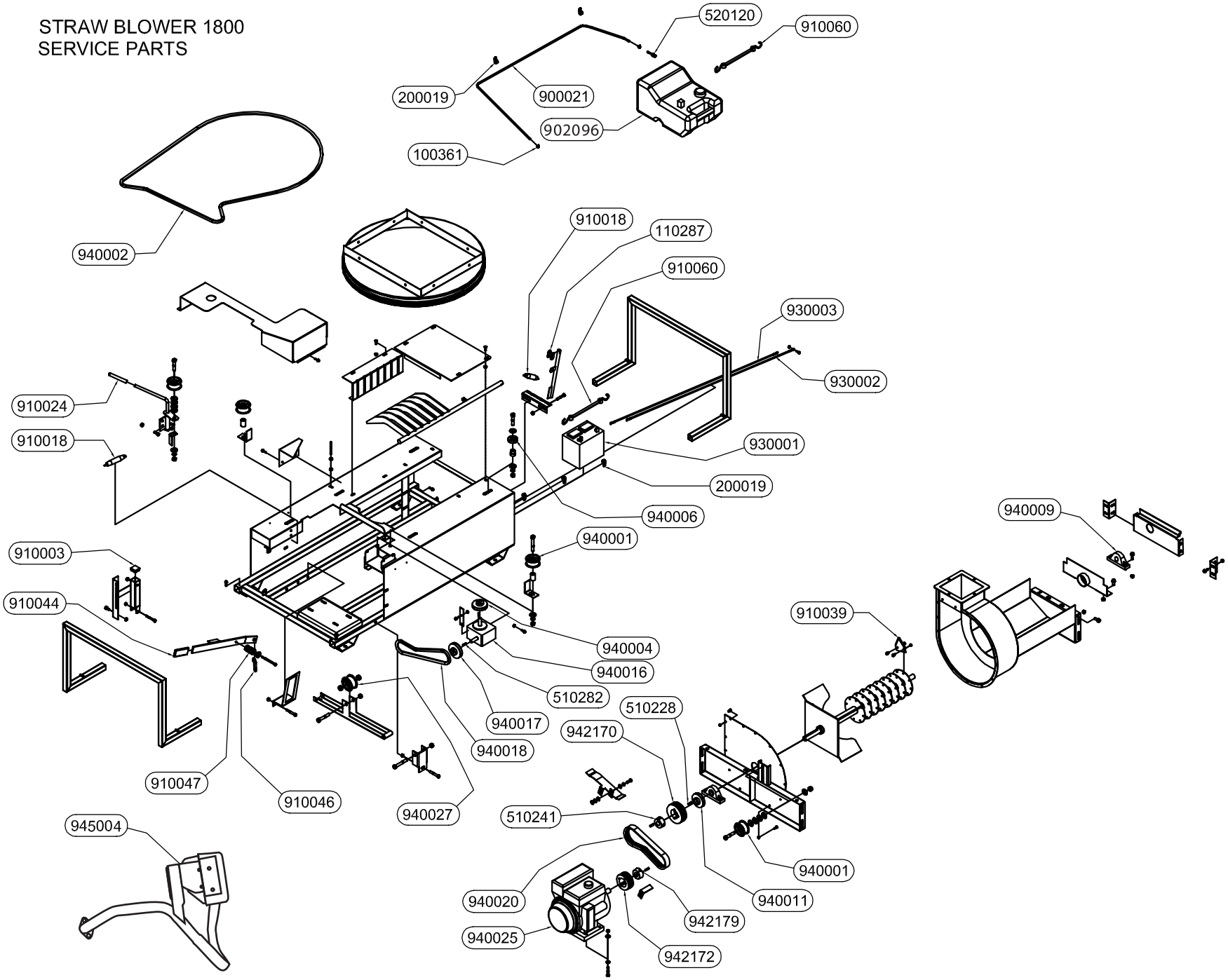

1/06/04

STRAW BLOWER 1800
SERVICE PARTS

PART #	QTY	NAME
100361	2	CLAMP, HOSE 1/4"
110287	1	CONNECTING LINK, #80
200019	5	CLAMP, ADEL 5/8 ID
510228	3	KEY, .25 X .25 X 1.0
510241	1	BUSHING, QD 1" SDS
510282	2	3/16 X 1 KEY
520120	1	ADAPTER, 4BI-4MP
900021	1	HOSE, FUEL LINE, SB1800
902096	1	FUEL TANK
910003	1	CAP PLUG
910018	2	SPRING
910024	1	SHIFT ROD COVER
910039	32	CUTTING KNIFE
910044	1	COVER, ENGAGING HANDLE
910046	1	ENGAGING CHANNEL CLIP
910047	1	SPRING
910060	2	HOLD DOWN STRAP
930001	1	BATTERY, STRAWBLOWER GAS
930002	1	BATTERY CABLE, POSITIVE
930003	1	BATTERY CABLE, NEGATIVE
940001	4	NARROW IDLER PULLEY
940002	1	TUB DRIVE BELT
940004	1	GEAR BOX TOP SHEAVE
940006	4	TUB BASE BEARING
940009	2	PILLOW BLOCK BEARING
940011	1	SHEAVE 3.0 X 1
940016	1	GEAR BOX
940017	1	GEAR BOX SIDE SHEAVE
940018	1	GEAR BOX BELT
940020	1	BANDED DRIVE BELT
940025	1	ELECTRIC START ENGINE, 18 HP
940027	1	WIDE IDLER PULLEY
942170	1	SHEAVE, 3/3V4.50 SDS-QD
942172	1	SHEAVE, 3/3V6.65 SH-QD
942179	1	BUSHING, QD 1" SH

1-06-03

STRAW BLOWER 1300, 1800
BOLTS, NUTS & WASHERS

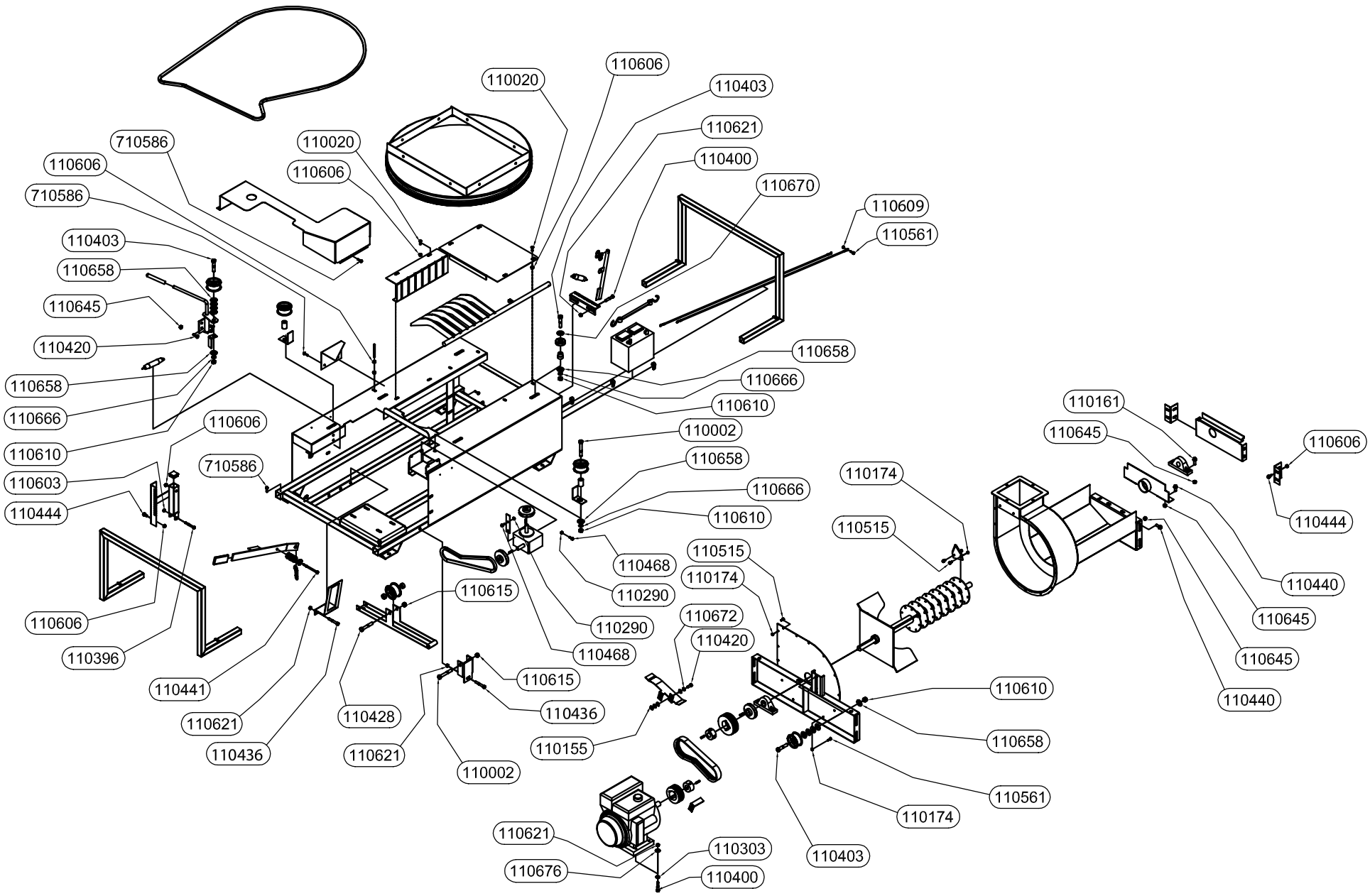

PART #	QTY	NAME
110002	3	BOLT, 1/2-13 X 3.5
110020	6	BOLT, 5/16-18 X .75 CARRIAGE
110155	12	WASHER, 3/8 FLAT, "SAE"
110161	4	BOLT, 3/8-16 X 1.25 WIZ FLANGE
110174	78	NUT, 1/4-20, LOCK (2-WAY)
110290	6	NUT, 1/4-20 WHIZ FLANGE
110303	4	WASHER, FLAT, 3/8 X .112
110396	1	BOLT, 5/16-18 X 2.5
110658	20	WASHER, 1/2 FLAT
110400	6	BOLT, 3/8-16 X 2
110403	6	BOLT, 1/2-13 X 2.5
110603	5	NUT, 5/16-18 LOCK (NYLON)
110420	5	BOLT, 3/8-16 X 1
110606	18	NUT, 5/16-18 WIZ FLANGE
110428	1	BOLT, 1/2-13 X 3
110666	8	WASHER, 1/2 LOCK
110609	2	NUT, 1/4-20
110610	8	NUT, 1/2-13
110672	3	WASHER, 3/8 LOCK
110676	4	WASHER, FLAT .375 STANDARD
110436	3	BOLT, 3/8-16 X 2.50
110615	2	NUT, 1/2-13 LOCK UNI-TORQUE
110440	10	BOLT, 3/8-16 X 1 WIZ FLANGE
110441	1	BOLT, 5/16-18 X 4
110444	9	BOLT, 5/16-18 X .75 WIZ FLANGE
110621	9	NUT, 3/8-16 LOCK
110468	6	BOLT, 1/4-20 X .75 WIZ FLANGE
110515	74	BOLT, 1/4-20 X .5
710586	8	SCREW, 1/4 X 1 TEK SELF TAP
110561	6	BOLT, 1/4-20 X .75
110645	16	NUT, 3/8-16 WIZ FLANGE
110670	4	WASHER, 7/16 FLAT STANDARD

STRAW BLOWER 1600
BOLTS, NUTS & WASHERS

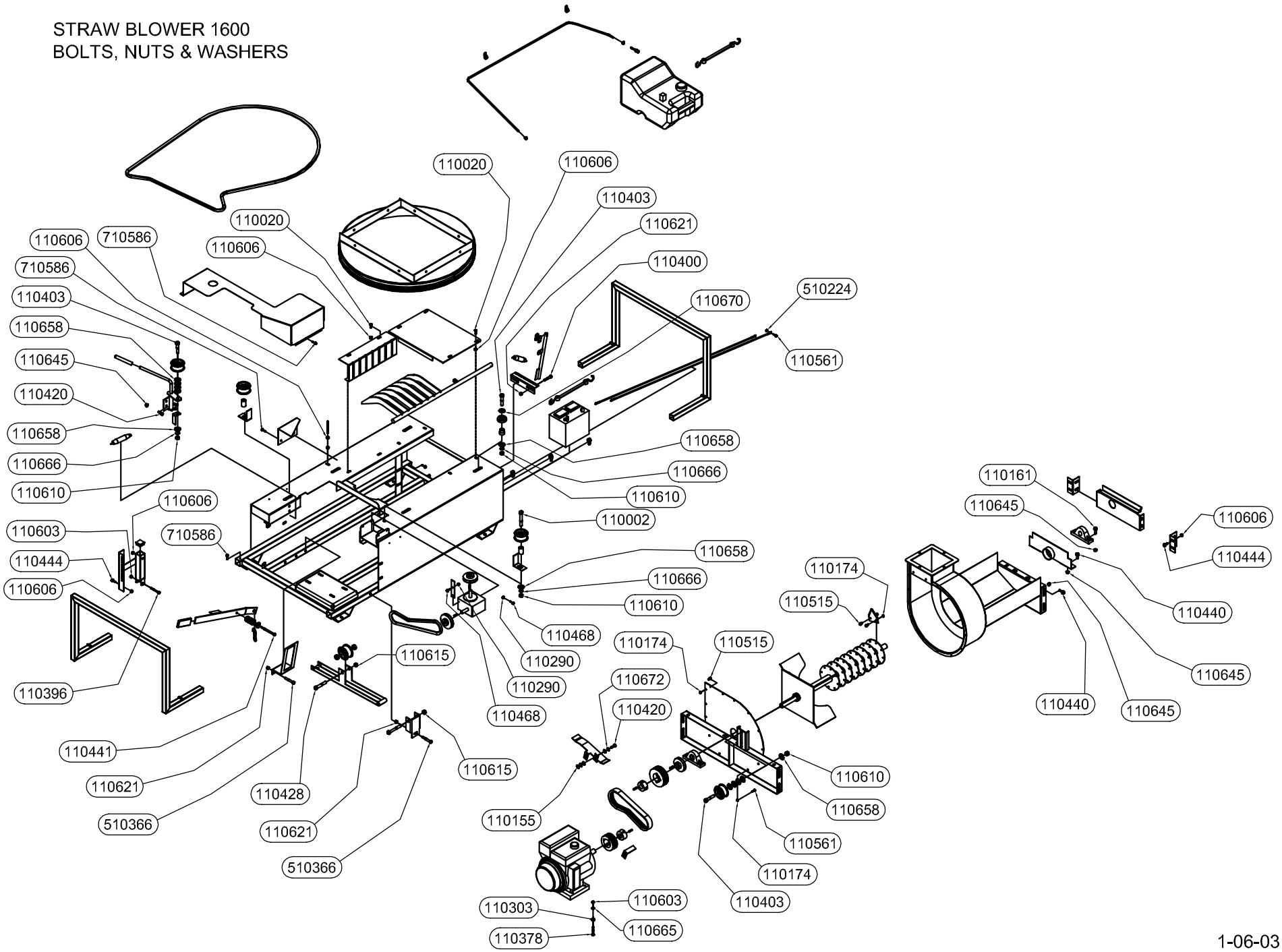

PART #	QTY	NAME
110002	3	BOLT, 1/2-13 X 3.5
110020	6	BOLT, 5/16-18 X .75 CARRIAGE
110155	12	WASHER, 3/8 FLAT, "SAE"
110161	4	BOLT, 3/8-16 X 1.25 WIZ FLANGE
110174	78	NUT, 1/4-20, LOCK (2-WAY)
110290	6	NUT, 1/4-20 WHIZ FLANGE
110303	4	WASHER, FLAT, 3/8 X .112
110378	4	BOLT, 5/16-18 X 2
110396	1	BOLT, 5/16-18 X 2.5
110658	20	WASHER, 1/2 FLAT
110400	6	BOLT, 3/8-16 X 2
110403	6	BOLT, 1/2-13 X 2.5
110603	5	NUT, 5/16-18 LOCK (NYLON)
110420	5	BOLT, 3/8-16 X 1
110606	18	NUT, 5/16-18 WIZ FLANGE
110665	4	WASHER, FLAT 5/16 STANDARD
110428	1	BOLT, 1/2-13 X 3
110666	8	WASHER, 1/2 LOCK
510224	2	NUT, 1/4-20
110610	8	NUT, 1/2-13
110672	3	WASHER, 3/8 LOCK
510366	3	BOLT, 3/8-16 X 2.50
110615	2	NUT, 1/2-13 LOCK UNI-TORQUE
110440	10	BOLT, 3/8-16 X 1 WIZ FLANGE
110441	1	BOLT, 5/16-18 X 4
110444	9	BOLT, 5/16-18 X .75 WIZ FLANGE
110621	9	NUT, 3/8-16 LOCK
110468	6	BOLT, 1/4-20 X .75 WIZ FLANGE
110515	74	BOLT, 1/4-20 X .5
710586	8	SCREW, 1/4 X 1 TEK SELF TAP
110561	6	BOLT, 1/4-20 X .75
110645	16	NUT, 3/8-16 WIZ FLANGE
110670	4	WASHER, 7/16 FLAT STANDARD

ROTOR ASSEMBLY, ALL MODELS
PART #915026

ITEM	QTY	PART #	NAME
1	1	140015	SNAP RING
2	1	910004	ROTOR NUT, MACHINED
3	1	910008	ROTOR SHAFT
4	8	910009	SICKLE SECTION MOUNT
5	1	910011	IMPELLER TO SICKLE MOUNT SPACER
6	7	910012	SICKLE MOUNT SPACER
7	1	910035	SPACER, RETAINING CLIP
8	1	915025	WELDMENT, FAN
9	0	510365	WASHER, FLAT .375 STANDARD

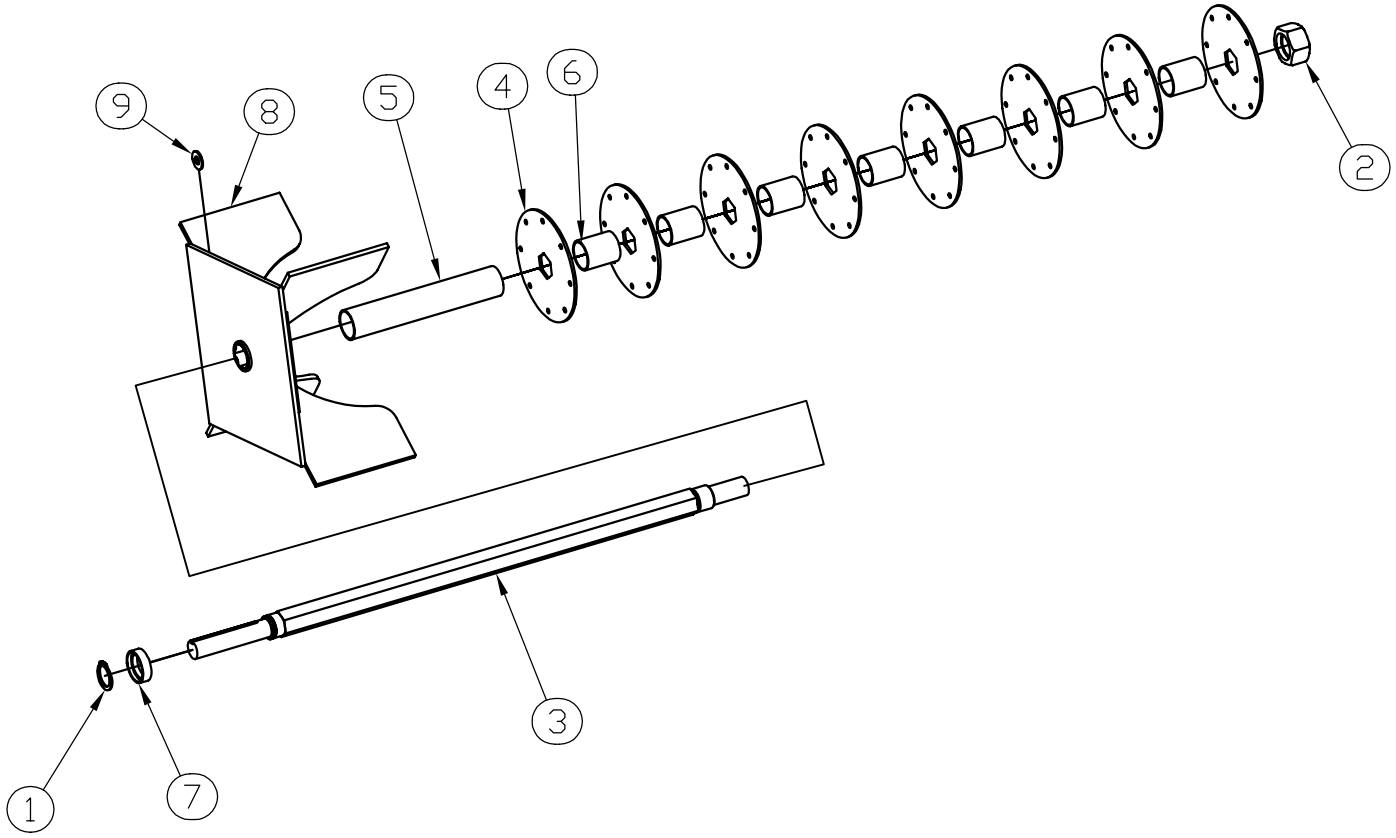

TUB ASSY ALL MODELS		
PART #	QTY	NAME
110174	1	NUT, 1/4-20, LOCK (2-WAY)
110672	8	WASHER, 3/8 LOCK
110049	2	WASHER, 5/16 ID 1.5 OD
110421	2	BOLT, 5/16-18 X 1.25
110608	2	NUT, 5/16-18
110667	1	WASHER, 1/4 LOCK
110612	8	NUT, 3/8-16
110556	8	BOLT, 3/8-16 X 1 CARRIAGE
910032	1	LID EYEBOLT
910033	1	LID SPRING
915007	1	BALE TUB ASSY
915029	1	SAFETY LID ASSY

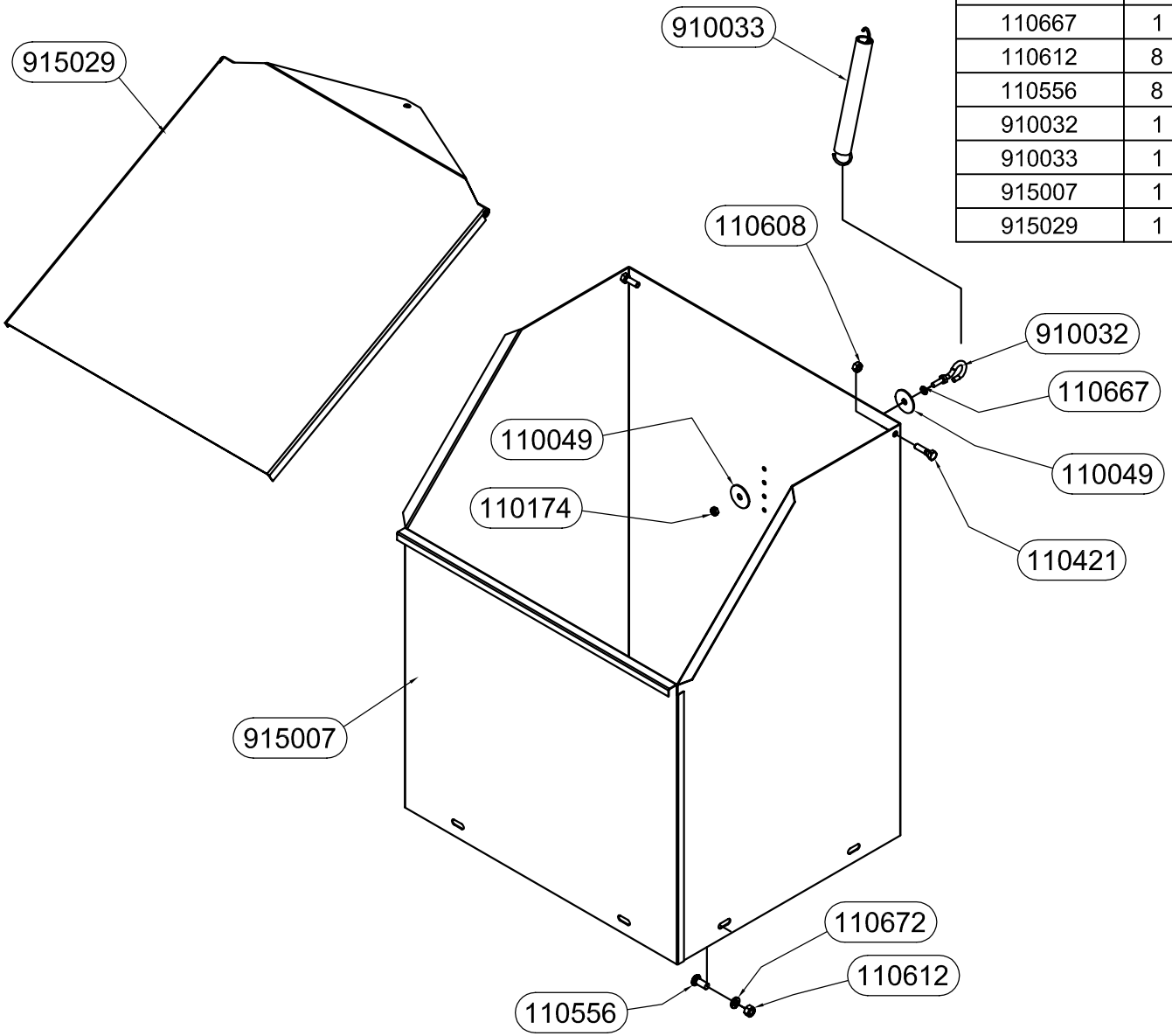

1-03

OPTION
HOSE ADAPTER KIT AND HOSE

910164 - HOSE ADAPTER KIT - ALL MODELS		
PART #	QTY	NAME
500307	2	PULL LATCH ASSEMBLY
110423	4	BOLT, 5/16-18 X 1
110608	4	NUT, 5/16-18
110674	4	5/16 LOCK WASHER
910131	1	HANDLE, HOSE
915023	1	HOSE ADAPTER
915138	1	QUICK ATTACH HOSE END WELDMENT
940028	3	CLAMP, 6" HOSE

HOSE - ALL MODELS		
900022	1	HOSE, 6" DISCHARGE - 30 ft.

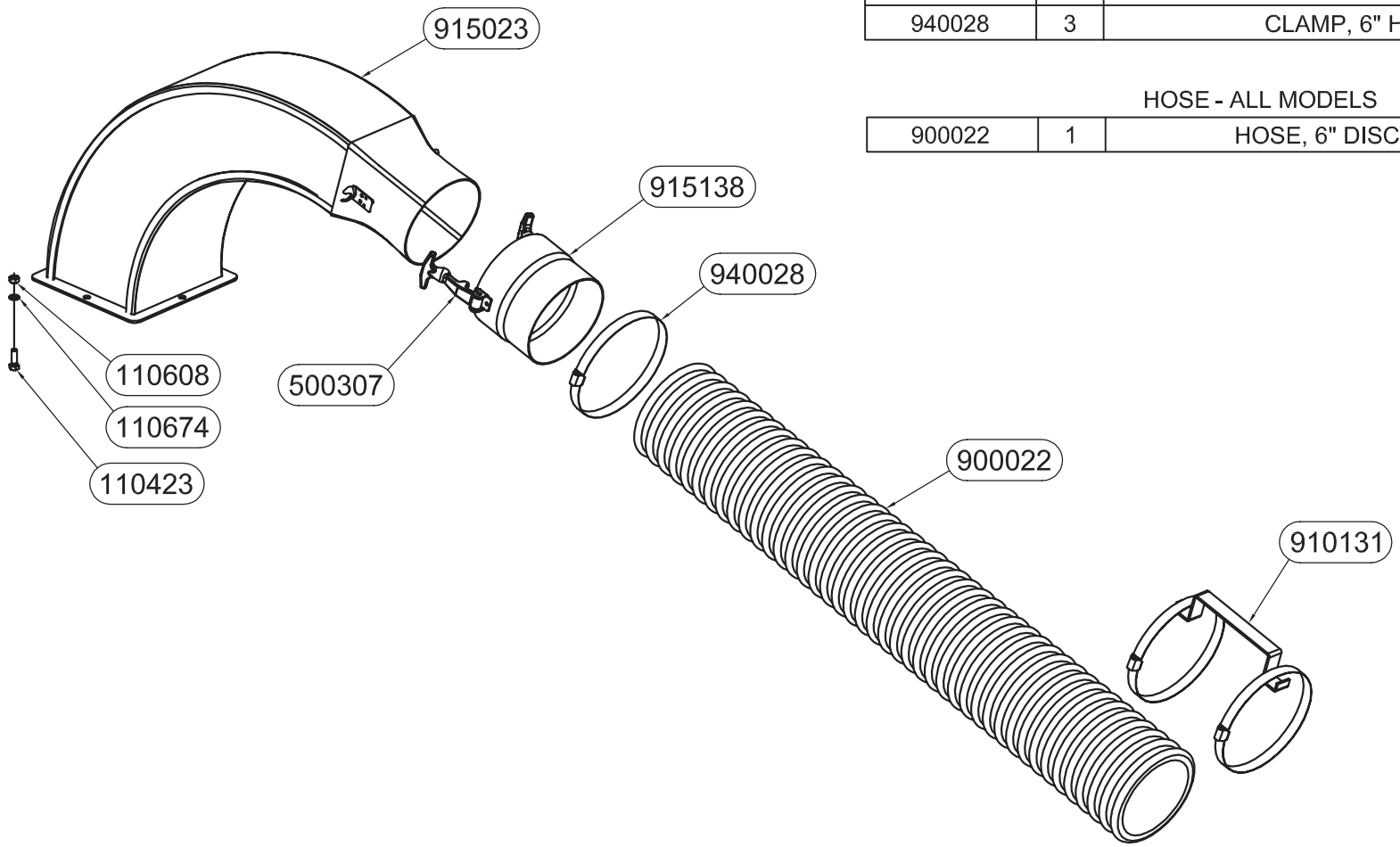

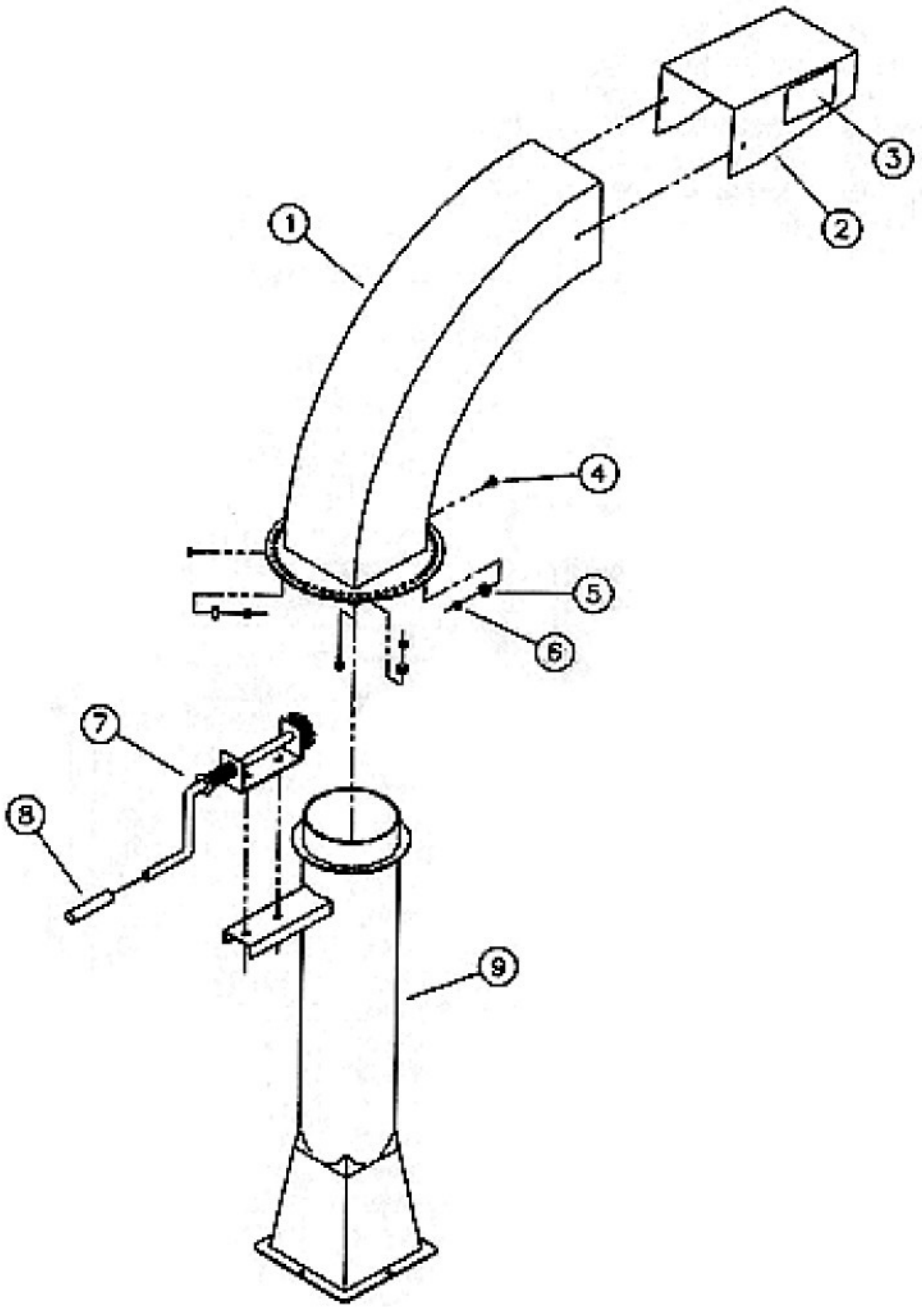

OPTION

DIRECTIONAL BLOWER SPOUT - 905005

#	PART #	QTY	NAME
1	915062	1	UPPER DIRECTIONAL SPOUT ASSY
2	910400	1	DIRECTIONAL SPOUT DEFLECTOR
3	902036	2	DECAL, STAY CLEAR OF CHUTE
4	110422	3	BOLT, 5/16-18 X .75
5	540079	3	BEARING, BALL, 608 2RS, .315"
	110298	3	* WASHER, 1/4 FLAT SAE
6	110600	3	NUT, 5/16-18, HEX LOCK 2 WAY
7	915119	1	CRANK ASSY, LONG HANDLE
8	902012	1	COVER, CRANK HANDLE
9	915060	1	LOWER DIRECTIONAL SPOUT ASSY

* Place washer between bearing and flange so that bearing turns freely. Grease area where lower spout contacts upper spout.

HARDWARE FOR ATTACHING DEFLECTOR TO UPPER SPOUT

111005	2	SCREW, 5/16-18X.75,SLOT MACH RH
110603	2	NUT, 5/16-18, LOCK (NYLON)

HARDWARE FOR ATTACHING CRANK TO LOWER SPOUT

110556	2	BOLT, 3/8-16 X 1, CARRIAGE
110676	8	* WASHER, 3/8 FLAT STANDARD
110618	2	NUT, 3/8-16, LOCK NYLON INSERT

* Use washers to bush up crank so that teeth fully mesh into holes in upper spout. Crank and spout should turn freely.

HARDWARE FOR ATTACHING LOWER SPOUT TO BASE UNIT

110423	4	BOLT, 5/16-18 X 1
110674	4	WASHER, 5/16 LOCK
110608	4	NUT, 5/16-18

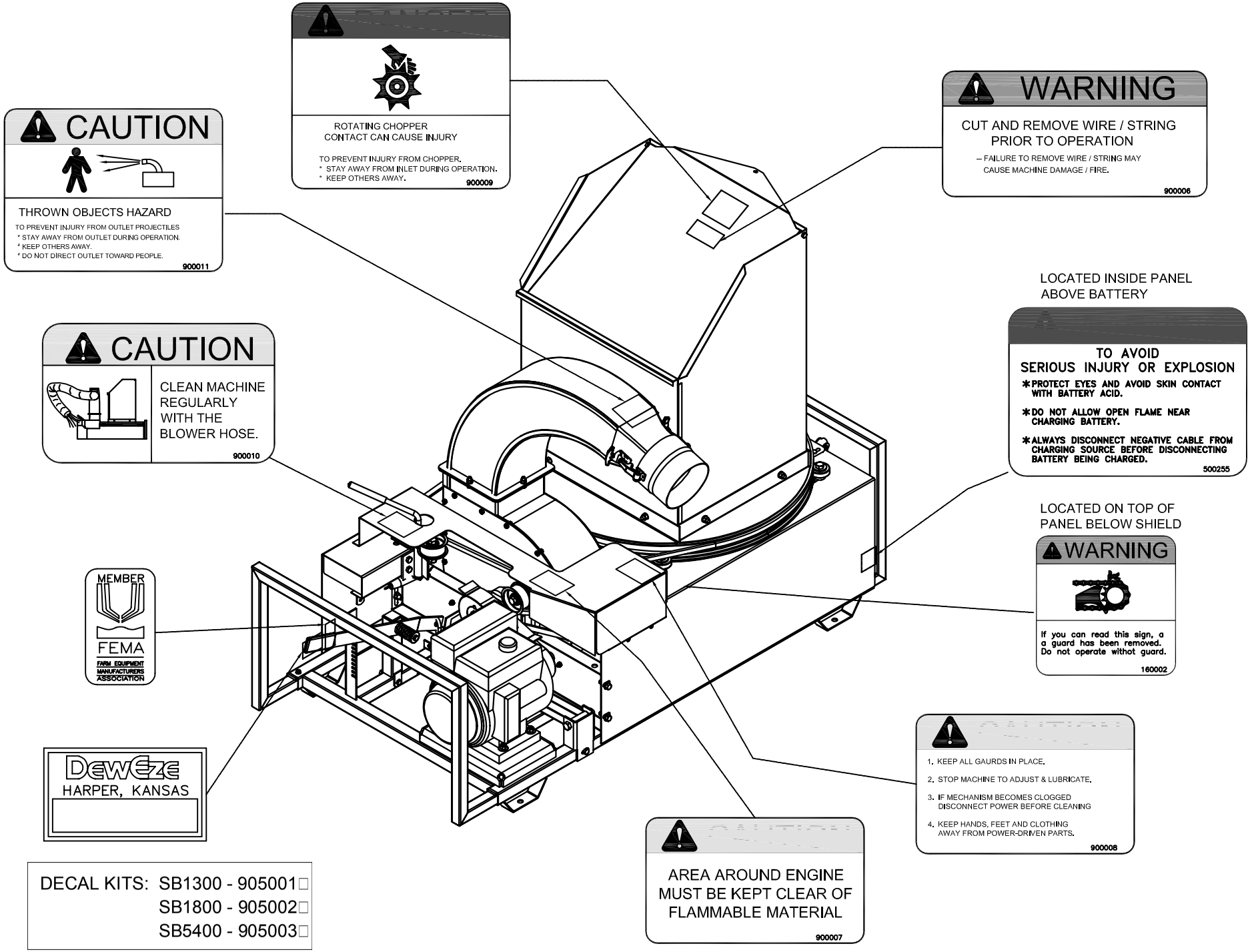

DECAL KITS: SB1300 - 905001□
SB1800 - 905002□
SB5400 - 905003□